ITEM 5 - SIGNS AND SIGN SUPPORTS

5.1 DESCRIPTION: Regulatory and warning signs shall be installed at locations shown on the Plans or as directed by the City in accordance with the specification requirements contained herein. Street name signs shall be provided for each individual street at the locations specified. Where two or more name signs are required at the same location, a common street post may be used.

5.2 REGULATORY AND WARNING SIGNS: Regulatory and warning signs shall have the face side reflectorized. Sheet aluminum sign blanks shall be 0.125 inch thick and shall conform to ASTM B209, alloy 6061-T6. All sign messages, borders and sizes shall be in conformity with "Manual on Uniform Traffic Control for Streets and Highways".

Reflective sheeting for sign background and letters shall conform to Item 636, Aluminum Signs (Type A), Texas Department of Highways and Public Transportation Standard Specifications for Construction of Highways Streets and Bridges, 1982.

5.3 SIGN POST AND CAP: Sign supports shall consist of a post and cap. The post shall be 2-3/8 inches in diameter and have a minimum wall thickness of 0.80 thickness and shall be of galvanized tubing. The post shall have a minimum length of 12 feet and 6 inches. The post shall be installed in a bored hold having a minimum diameter of 10 inches and a minimum depth of 2-1/2 feet. The post shall be embedded in 1550 psi concrete in the bored hole.

The street post cap shall consist of a cap 2-1/2 inches in diameter and shall be made of aluminum having a minimum thickness of 0.080 inches. The cap shall have a slot 4 inches in length, 1-1/16 inches in height and shall be furnished with two self locking bolts.

5.5 STREET SIGN BRACKET: The street sign bracket shall be of aluminum having slots 4 inches in length, 1/16 inches in height and shall have 4 self locking bolts.

END OF ITEM

ITEM 6 - STREET ADDRESS MARKS

6.1 DESCRIPTION: Street address marks shall be installed for each lot in the subdivision. The marks shall be located at the center of the lot on the face of the curb. The address marks shall be of deep green background with reflective white numbers. The number size shall be 5 inches in height. The background of the address mark shall be 18 inches in length from the top of the curb to the gutter flow line. The address mark shall show the full numerical portion of the address of the lot.

END OF ITEM

GENERAL NOTES

A. ALL MATERIALS & PRACTICES SHALL BE AS SPECIFIED IN THE NORTH CENTRAL TEXAS COUNCIL OF GOVERNMENTS STANDARD SPECIFICATIONS FOR PUBLIC WORKS CONSTRUCTION (WITH MOST RECENT AMENDMENTS.)

B. GENERAL:
USUAL PAVEMENT THICKNESS IS AS SHOWN IN SPECIAL NOTES. SUBGRADE DESIGN SHALL CONFORM TO CITY OF WYLIE DEPARTMENT OF ENGINEERING REQUIREMENTS, AND SHALL EXTEND 12" MIN. BEHIND CURB.

C. REINFORCED CONCRETE PAVEMENT:
1. CONCRETE STRENGTH SHALL BE 3500 PSI.
2. ALL CURBS SHALL BE INTEGRAL WITH PAVEMENT.
3. DETAIL AND ARRANGEMENT OF PAVEMENT JOINTS, ALL TYPES, SHALL BE AS INDICATED ON ACCOMPYING DETAILS.
4. BAR LAPS SHALL BE THIRTY DIAMETERS.
5. IF PAVEMENT IS SLIPFORMED, STEEL SHALL BE SECURED TO PREVENT MOVEMENT.

D. SUBGRADE :
SUBGRADE UNDER ALL PAVEMENT SHALL BE 7" THICK AND SHALL BE STABILIZED WITH 7 1/2 PERCENT, BY WEIGHT, WITH HYDRATED LIME, APPLIED TO A DENSITY OF NOT LESS THAN 95 PERCENT. LABORATORY TESTS MUST BE SUBMITTED TO THE ENGINEERING DEPARTMENT FOR APPROVAL, AFTER THE DETERMINATION IS MADE AS TO THE AMOUNT OF LIME REQUIRED. LABORATORY TESTS MAY BE WAIVED PROVIDED AT LEAST 43 POUNDS OF LIME PER SQUARE YARD IS USED.

E. BAR CHAIR OR AN APPROVED DEVICE SHALL BE FURNISHED.

F. ALL BARRICADING SHALL MEET TEXAS MANUAL OF UNIFORM TRAFFIC CONTROL DEVISES.

SPECIAL NOTES

1. PAVEMENT THICKNESS AND STRENGTHS UNLESS OTHERWISE SHOWN ON THE PLANS:
RESIDENTIAL : 6" – 3500 P.S.I. COMP.
ALL OTHERS : 8" – 3500 P.S.I. COMP.

2. ALL MEDIANS AND PARKWAYS SHALL BE PROVIDED WITH GRASSED, FERTILIZED, GROUNDCOVER.

3. FIRE LANE REQUIREMENTS:
THICKNESS 6" 3500 P.S.I., #3 REBAR ON 18" CENTERS. EXPANSION JOINTS AS PER DETAIL ON PAGE SD–P07.

	GENERAL NOTES	STANDARD CONSTRUCTION DETAILS PAVING	
		DATE: 1999	SHEET: SD–P01

PAVING INDEX

GENERAL NOTES..... SD-P01
PLAN OF STEEL LAYOUT..... SD-P05
PLAN-JOINT SPACING..... SD-P06
TRANSVERSE EXPANSION JOINT..... SD-P07
JOINT DETAILS..... SD-P08
STREET HEADER..... SD-P09
CONSTRUCTION BARRICADING..... SD-P10
CURB AND CURB-AND-GUTTER..... SD-P11
ASPHALT PAVING CONNECTION..... SD-P12
ALLEY SECTIONS..... SD-P13
GENERAL NOTES FOR ALLEYS AND DRIVEWAYS..... SD-P14
ALLEY TURN 75° OR GREATER..... SD-P15
ALLEY TURN 30°-75°..... SD-P16
ALLEY INTERSECTING ALLEY..... SD-P17
ALLEY TURN 60°-90°..... SD-P18
ALLEY RETURN DETAILS..... SD-P19
EXISTING ALLEY RETURN MODIFICATIONS..... SD-P20
EXISTING ALLEY RETURN MODIFICATIONS..... SD-P21
ALLEY ENTRANCE INTO EXISTING STREET..... SD-P22
RAIL HEADER..... SD-P23
BRIDGE APPROACH SLAB..... SD-P24
PEDESTRIAN AND TRAFFIC RAILS..... SD-P25
MEDIAN PAVING STONE DETAIL..... SD-P26
MEDIAN DETAILS..... SD-P27
SPACING DIAGRAM FOR TRANSVERSE JOINTS..... SD-P28
TRAFFIC LIGHT CONDUIT PLAN..... SD-P29
INTERSECTION WIDENING DETAIL..... SD-P30
TYPICAL CONTOURS FOR MAJOR-MAJOR INTERSECTION..... SD-P31
CONCRETE SIDEWALK..... SD-P32
BARRIER FREE RAMPS..... SD-P33
DRIVEWAY RETURN DETAILS-ALLEY..... SD-P34A
DRIVEWAY RETURN DETAILS-STREET..... SD-P34
STREET CONNECTION..... SD-P35
TYPE III, PERMANENT BARRICADE DETAIL..... SD-P36
FLUME..... SD-P37
TYPE 6 RETAINING WALL..... SD-P38
EXPRESSWAY TYPE A..... SD-P40
MAJOR THOROUGHFARE TYPE B+..... SD-P41
MAJOR THOROUGHFARE TYPE B..... SD-P42
MAJOR THOROUGHFARE TYPE C..... SD-P43
SECONDARY THOROUGHFARE TYPE F..... SD-P44
SECONDARY THOROUGHFARE TYPE D..... SD-P45
SECONDARY THOROUGHFARE TYPE E..... SD-P46
MINOR ARTERIAL..... SD-P47
RESIDENTIAL PAVEMENT..... SD-P48
CONCRETE PAVERS AT INTERSECTIONS..... SD-P49

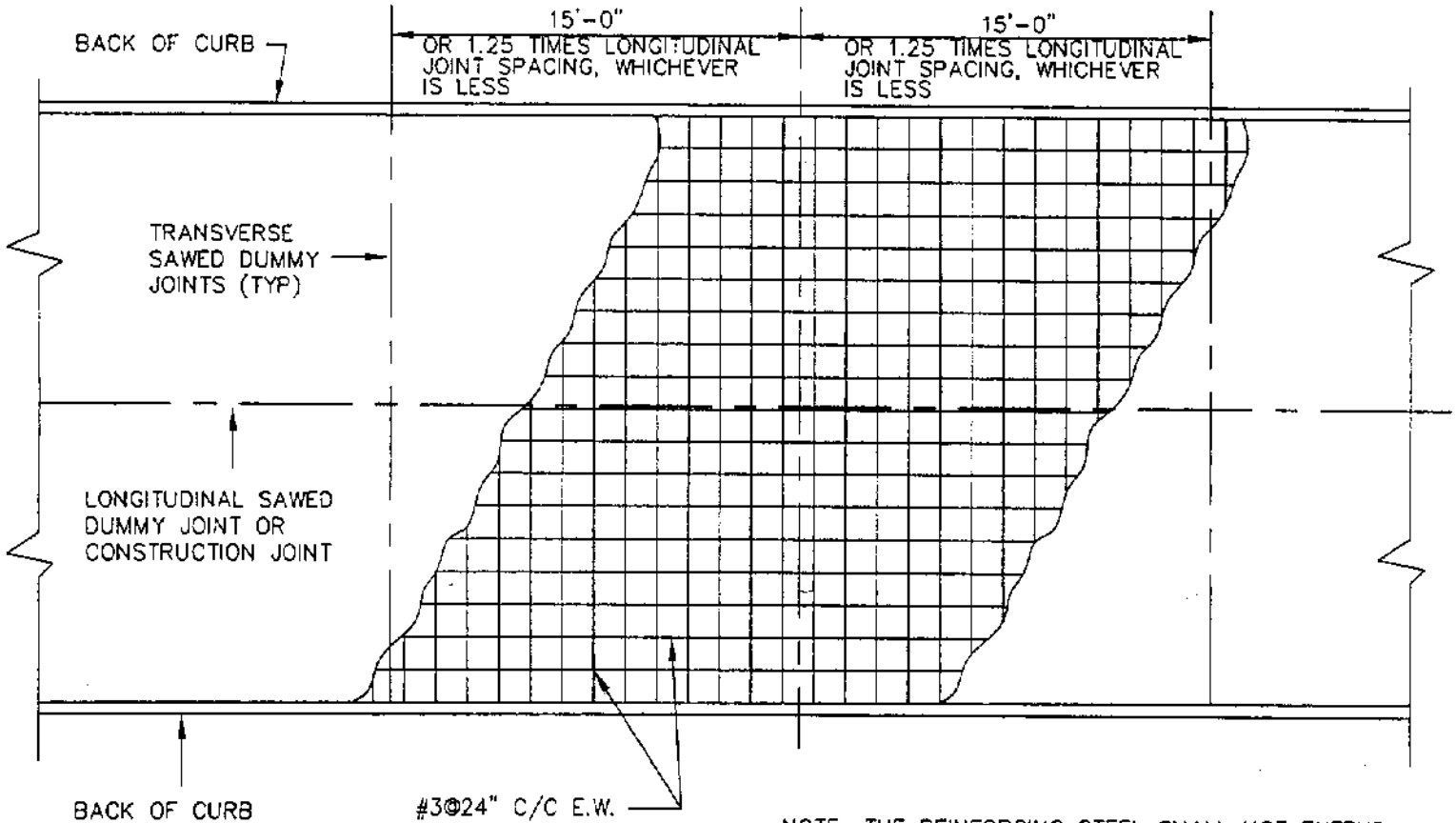

NOTE: THE REINFORCING STEEL SHALL NOT EXTEND THROUGH LONGITUDINAL OR TRANSVERSE CONTRACTION JOINTS.

PLAN OF STEEL LAYOUT

N.T.S.

PLAN OF STEEL LAYOUT

STANDARD CONSTRUCTION DETAILS
PAVING

DATE: 1999

SHEET: SD-P05

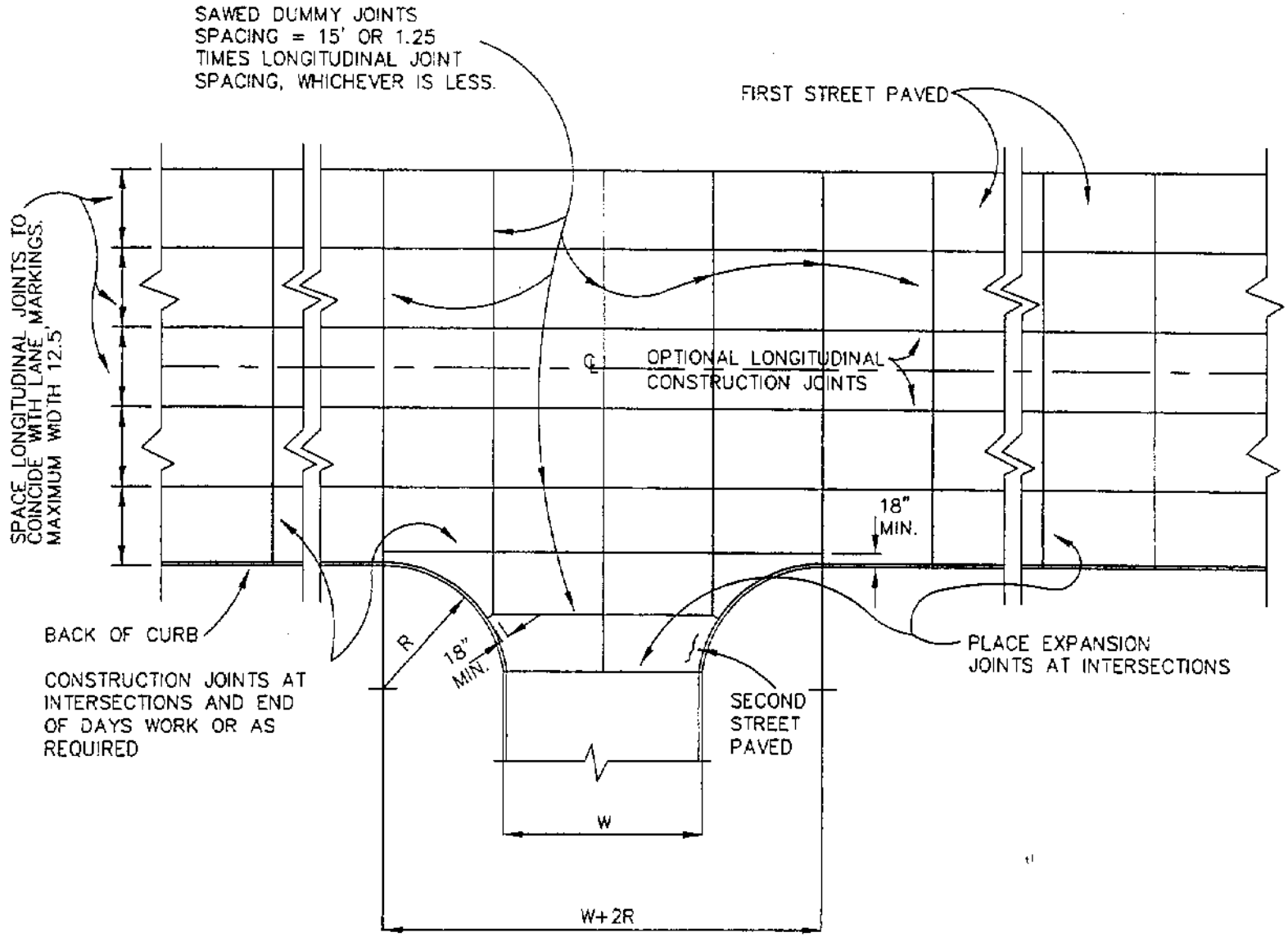

PLAN–JOINT SPACING
N.T.S.

PLAN–JOINT SPACING

STANDARD CONSTRUCTION DETAILS
PAVING

DATE: 1999

SHEET: SD–PXX06

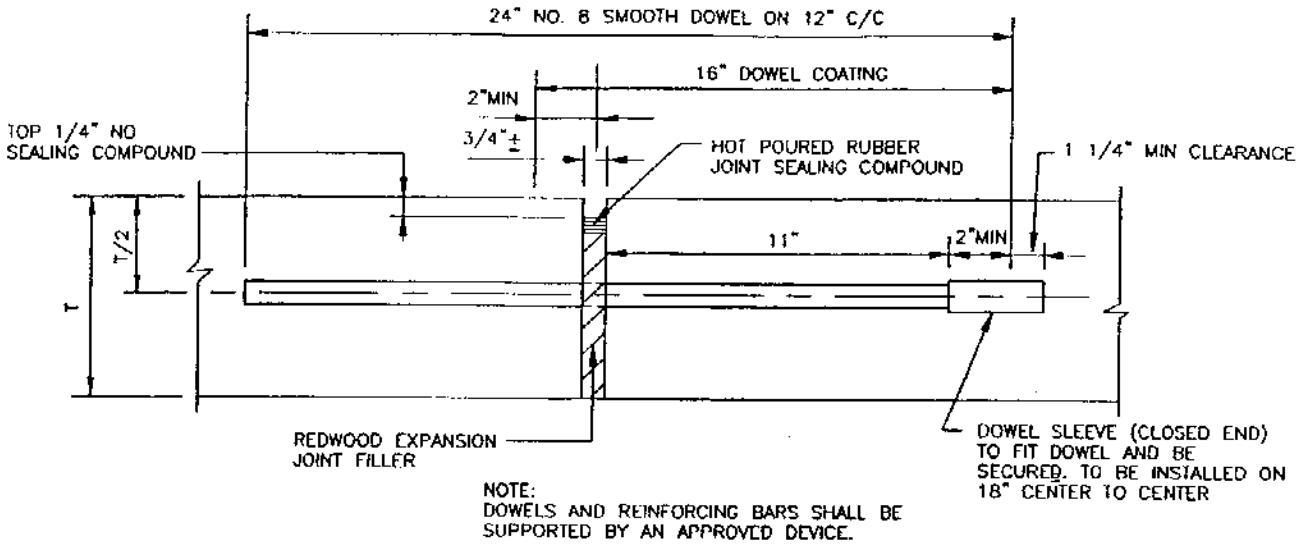

NOTE:
DOWELS AND REINFORCING BARS SHALL BE SUPPORTED BY AN APPROVED DEVICE.

TRANSVERSE EXPANSION JOINT

(SPACED 600 FT. MAXIMUM, LOCATE AT INTERSECTIONS), FIXED STRUCTURES OR ON PLANS.
T = PAVEMENT THICKNESS

	TRANSVERSE EXPANSION JOINT	STANDARD CONSTRUCTION DETAILS PAVING
		DATE: 1999 / SHEET: SD-P07

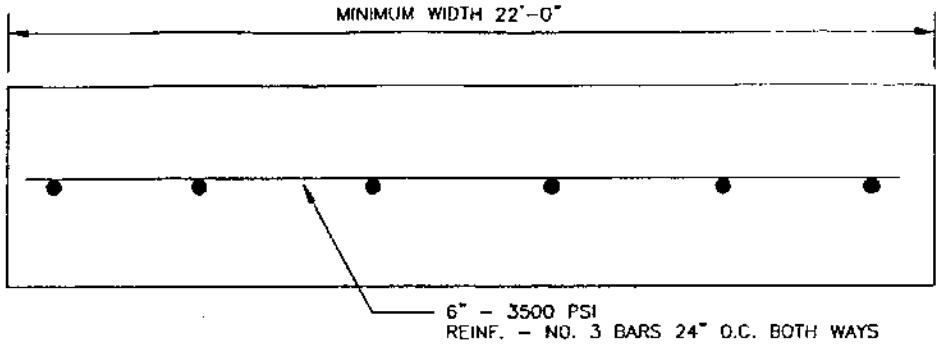

NOTES:

1. DOWELS & REBARS SHALL BE SUPPORTED BY AN APPROVED DEVICE.
2. EXPANSION JOINTS TO BE THE SAME AS USED FOR CONCRETE STREET PAVING.
3. SAWED TRANSVERSE DUMMY JOINT. SEE NOTE 7, SD-P06.
4. EXPANSION JOINTS AS SHOWN.

FIRE LANE PAVING & JOINT DETAIL

NTS

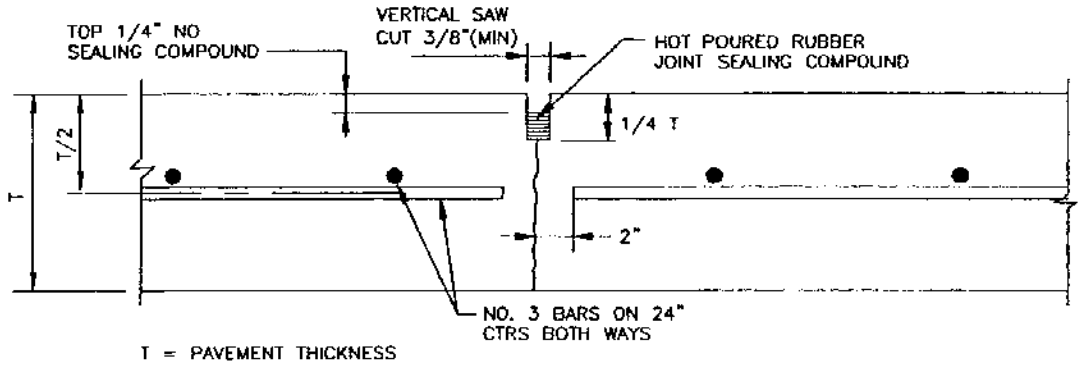

T = PAVEMENT THICKNESS

SAWED DUMMY JOINT

NTS

TRANSVERSE AND LONGITUDINAL JOINTS

DOWEL BAR NOTES:

1. DOWEL BARS SHALL BE DRILLED INTO PAVEMENT HORIZONTALLY BY USE OF A MECHANICAL RIG. DRILLING BY HAND IS NOT ACCEPTABLE AND PUSHING DOWEL INTO GREEN CONCRETE IS NOT ACCEPTABLE.
2. PRIOR TO EPOXY APPLICATION, DRILL HOLES SHALL BE BLOWN CLEAN WITH HIGH PRESSURE AIR.

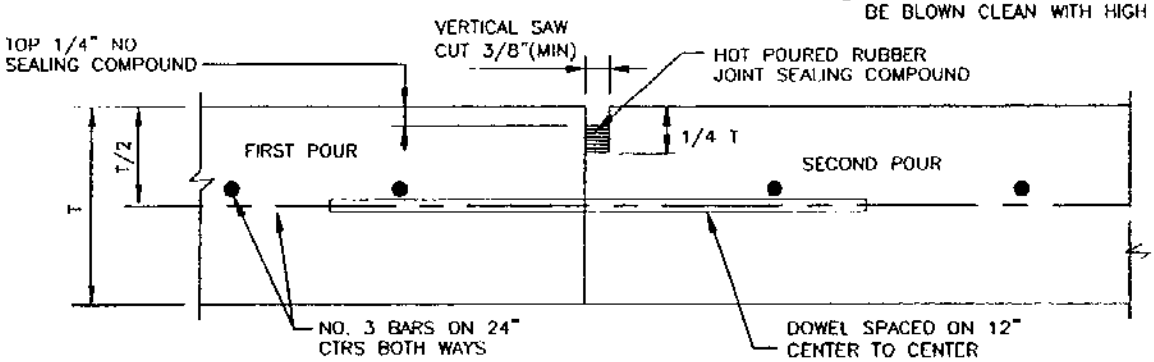

CONSTRUCTION JOINT FOR PAVEMENT

NTS

TRANSVERSE AND LONGITUDINAL JOINTS

DOWEL BAR SCHEDULE

SLAB DEPTH INCHES	DOWEL DIA. INCHES	DOWEL LENGTH INCHES
5	5/8	14
6	3/4	16
7	7/8	16
8	1	16
9	1-1/8	18

NOTE: T = PAVEMENT THICKNESS

	JOINT DETAILS	STANDARD CONSTRUCTION DETAILS PAVING		
		DATE: 1999	REV DATE:	SHEET: SD-P08

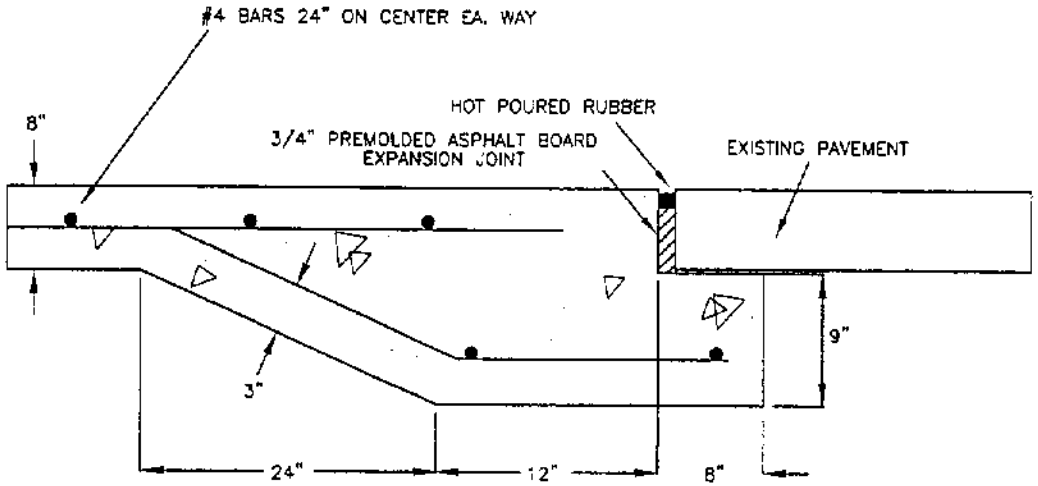

UNDERCUT STREET HEADER
WITH NO EXIST PVMT BRACKET
NTS

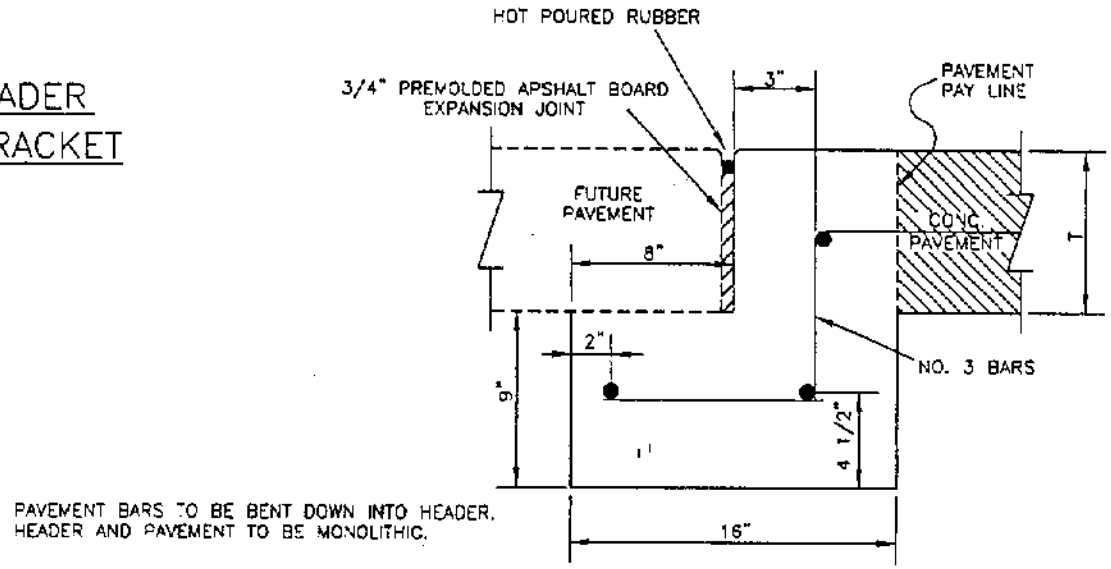

STREET HEADER
NTS

STREET HEADER

STANDARD CONSTRUCTION DETAILS
PAVING

DATE: 1999

SHEET: SD-P09

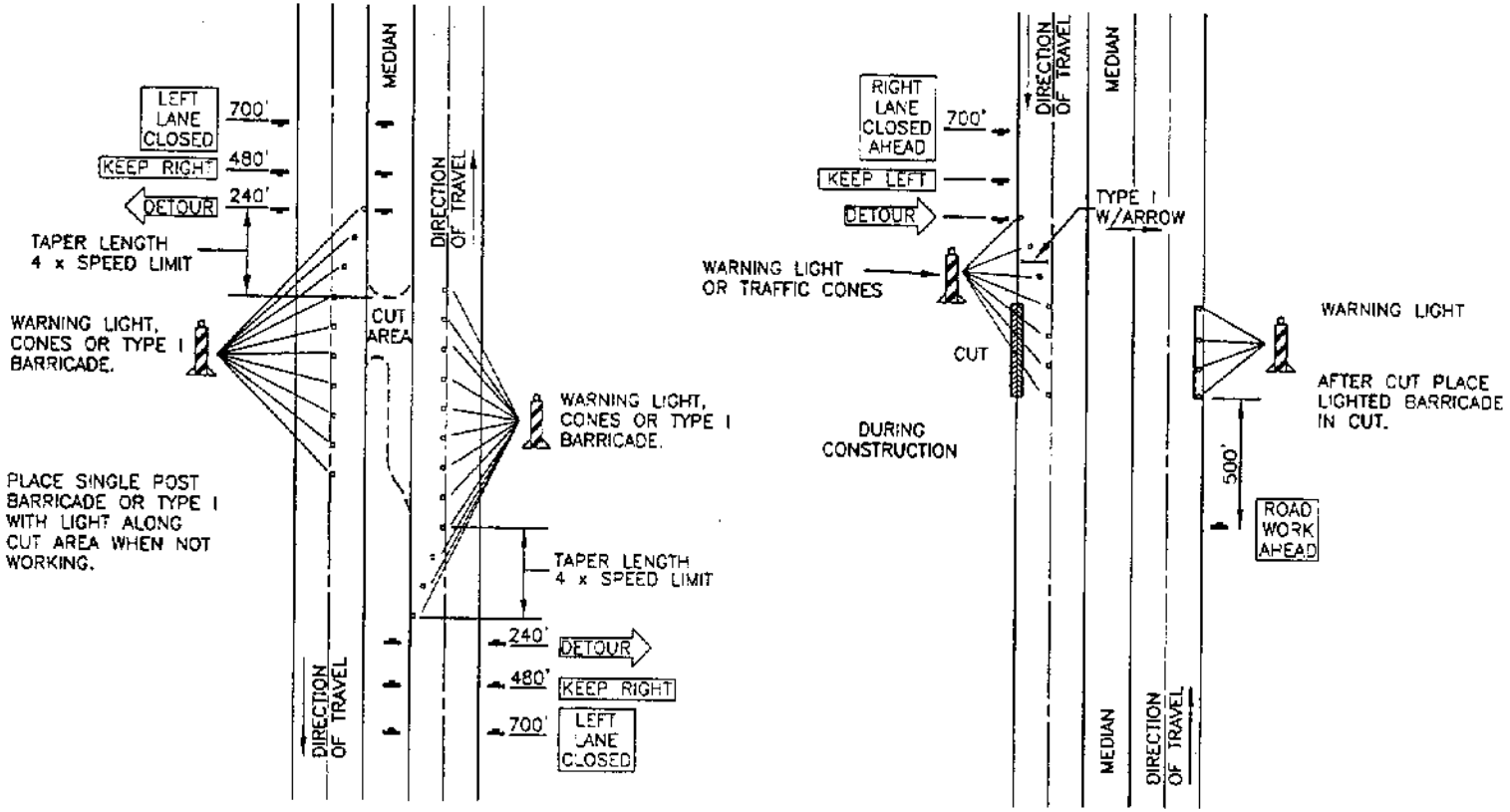

MEDIAN AND LEFT TURN CUT

NOTE: ALL BARRICADING SHALL MEET TEXAS MANUAL ON UNIFORM TRAFFIC CONTROL DEVICES. REFER TO THIS MANUAL FOR OTHER SITUATIONS.

TYPICAL CONSTRUCTION BARRICADING DETAILS

NTS

CONSTRUCTION BARRICADING

STANDARD CONSTRUCTION DETAILS
PAVING

DATE: 1999

SHEET: SD-P10

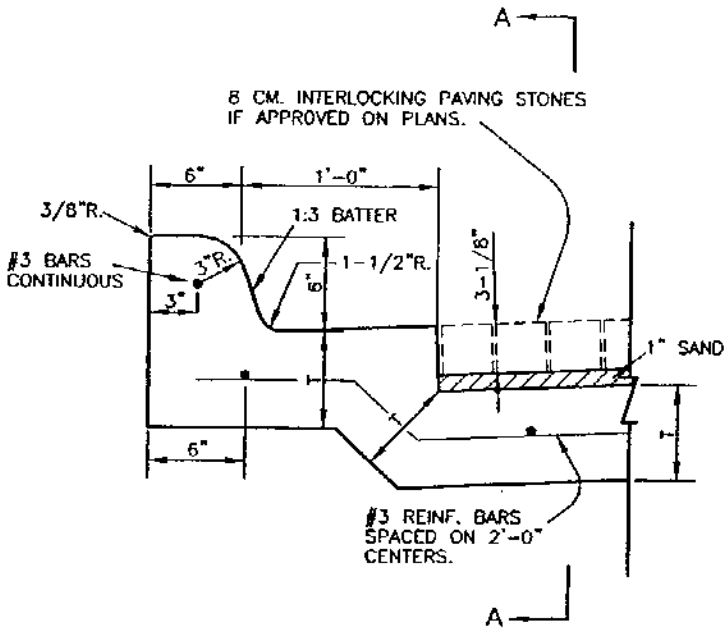

MONOLITHIC CURB

NTS

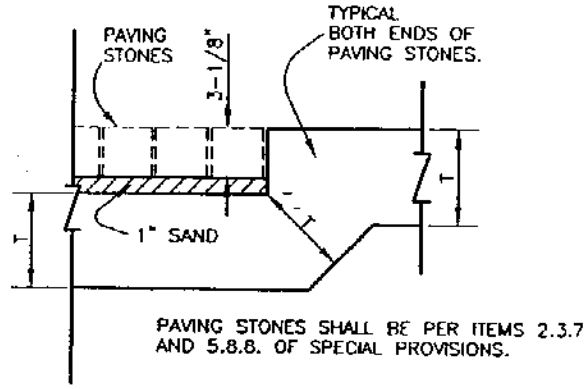

SECTION A–A

NTS

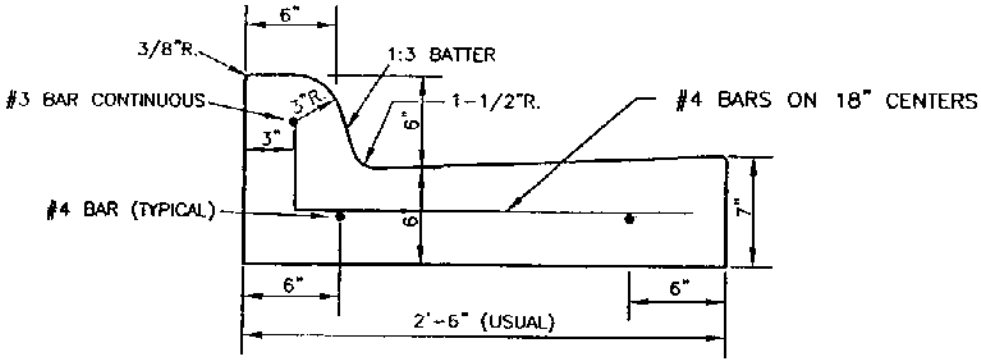

SEPARATE CURB–AND–GUTTER

NTS

	CURB AND CURB–AND–GUTTER	STANDARD CONSTRUCTION DETAILS PAVING	
		DATE: 1999	SHEET: SD–P11

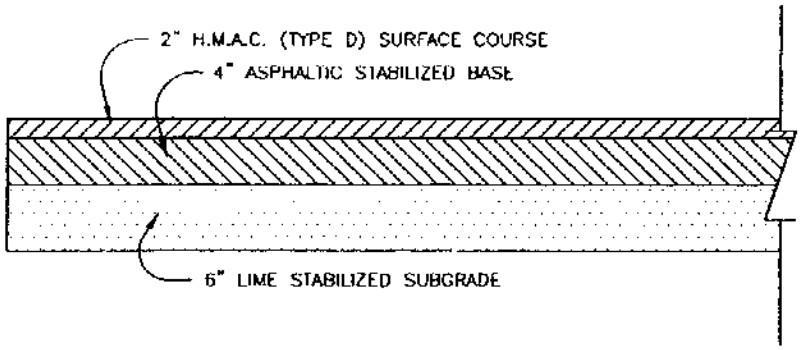

ASPHALT PAVING CONNECTION
TYPICAL SECTION
NTS

	ASPHALT PAVING CONNECTION	STANDARD CONSTRUCTION DETAILS PAVING	
		DATE: 1999	SHEET: SD-P12

ALLEY WIDTH (A)	HALF SECTION WIDTH (L)	INVERT DEPTH (d)
10'	5'	5"
12'	6'	6"
16'	8'	6"
20'	10'	6"

NOTE: SUBGRADE TO BE AS SPECIFIED IN SD-P01D.

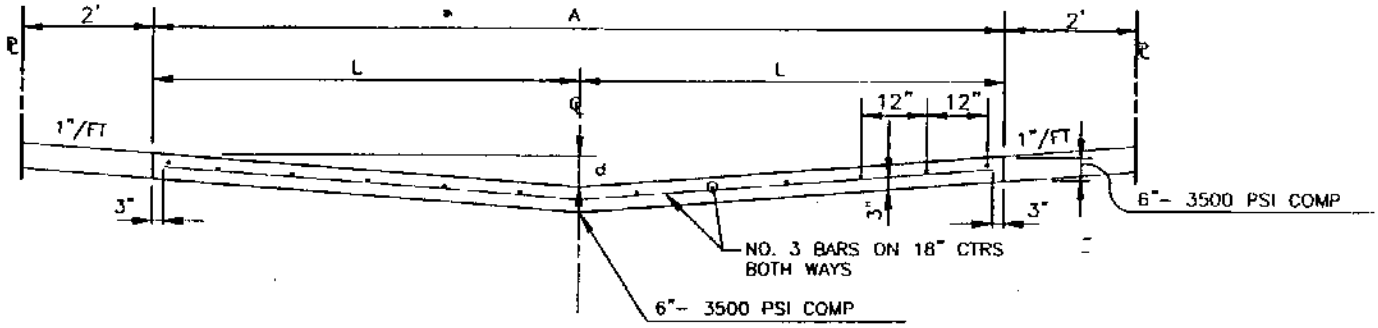

STANDARD 10',12',16', & 20' ALLEY SECTION

NTS

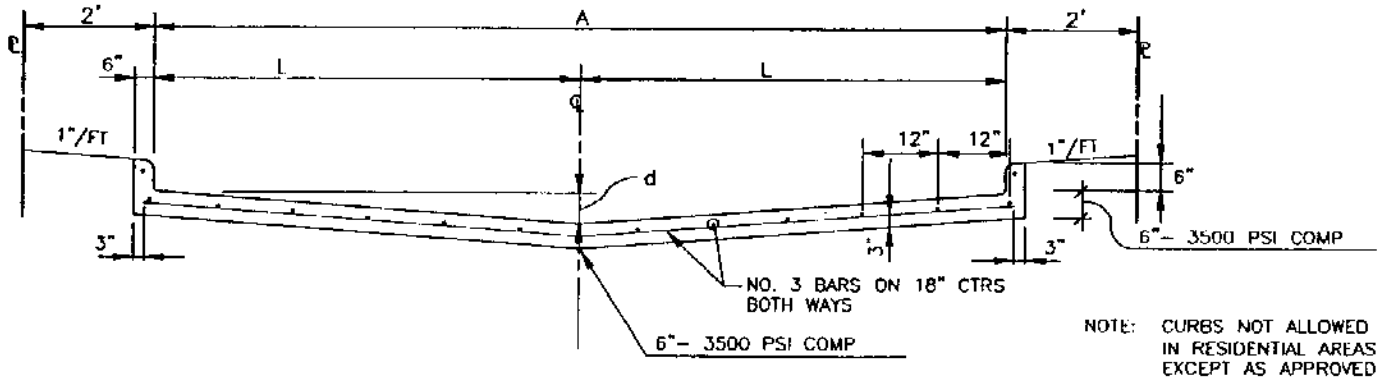

NOTE: CURBS NOT ALLOWED IN RESIDENTIAL AREAS EXCEPT AS APPROVED BY THE CITY.

#3 BAR CONTINUOUS IN CURB

STANDARD ALLEY SECTION WITH CURBS

NTS

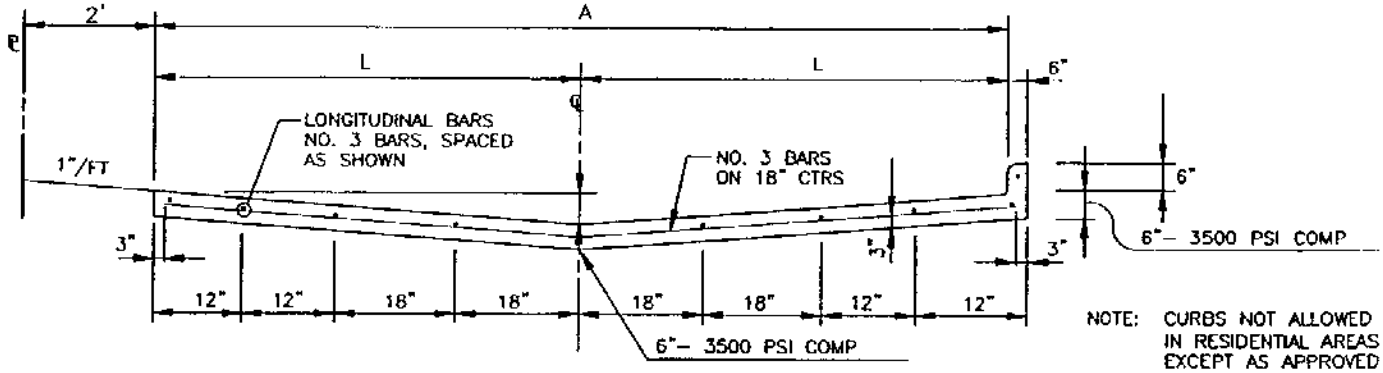

NOTE: CURBS NOT ALLOWED IN RESIDENTIAL AREAS EXCEPT AS APPROVED BY THE CITY.

#3 BAR CONTINUOUS IN CURB

ALTERNATE ALLEY SECTION/CURB

NTS

	ALLEY SECTIONS	STANDARD CONSTRUCTION DETAILS PAVING		
		DATE: 1999	REV DATE:	SHEET: SD-P13

GENERAL NOTES FOR ALLEYS AND DRIVEWAYS

1. CONCRETE FOR ALLEY RETURNS AND DRIVEWAYS SHALL HAVE A MINIMUM COMPRESSIVE STRENGTH AT 28 DAYS IDENTICAL TO THAT SPECIFIED FOR THE STREET PAVEMENT OR BASE WHEN BUILT AS COMPONENTS OF A CONCRETE PAVING PROJECT. WHEN BUILT SEPARATELY, THE STRENGTH SHALL BE AS SPECIFIED ON THE CONSTRUCTION PLANS.

2. SPACING AND CONSTRUCTION OF JOINTS SHALL CONFORM SHEET SD-P06 & SD-P07.

	GENERAL NOTES	STANDARD CONSTRUCTION DETAILS PAVING		
		DATE: 1999	REV DATE:	SHEET: SD-P14

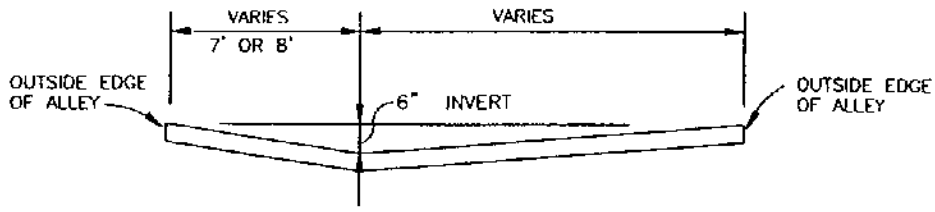

SECTION A – A

NOTE: ALLEY PAVING TO BE PLACED IN SHADED AREA WHEN SCREENING WALL IS ALONG PROPERTY LINE. SEE SD-P45, SCREENING WALL, SEC. B-B.

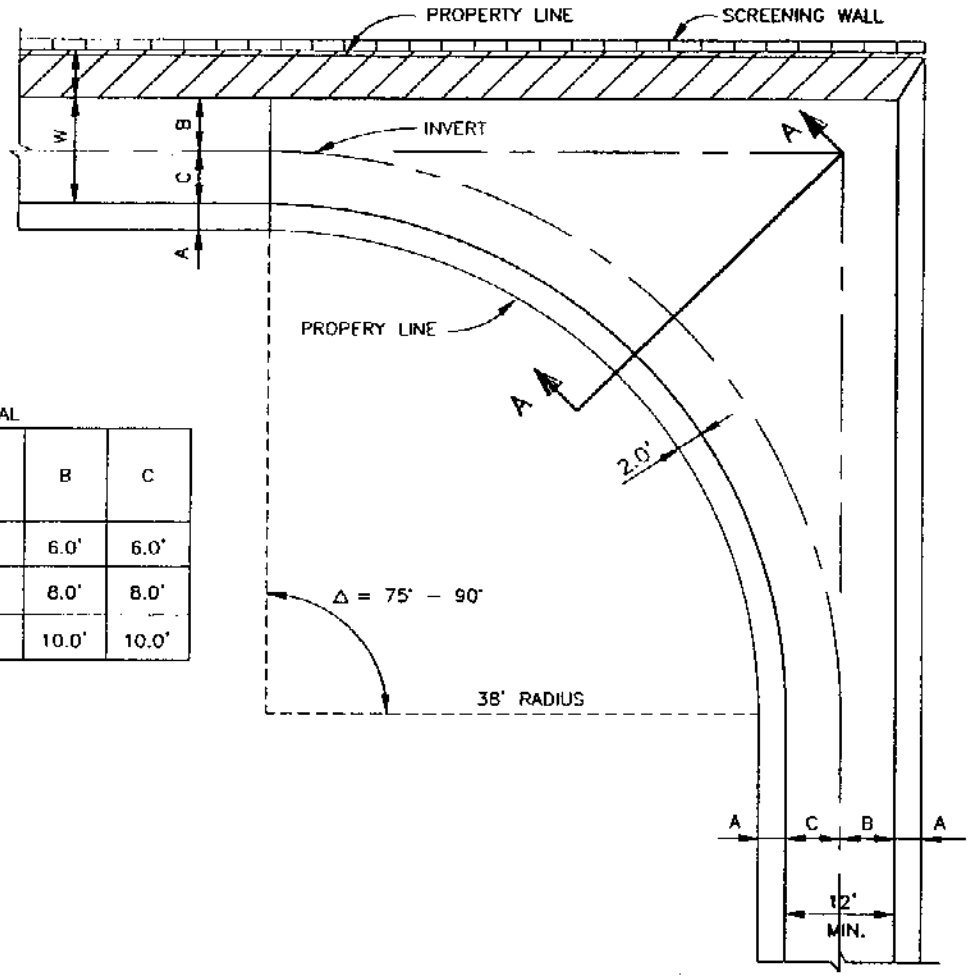

TYPICAL

ALLEY WIDTH (W)	A	B	C
12'	2.0'	6.0'	6.0'
16'	2.0'	8.0'	8.0'
20'	2.0'	10.0'	10.0'

ALLEY TURN 75° OR GREATER

NTS

	ALLEY TURN 75° OR GREATER	STANDARD CONSTRUCTION DETAILS PAVING		
		DATE: 1999	REV DATE:	SHEET: SD-P15

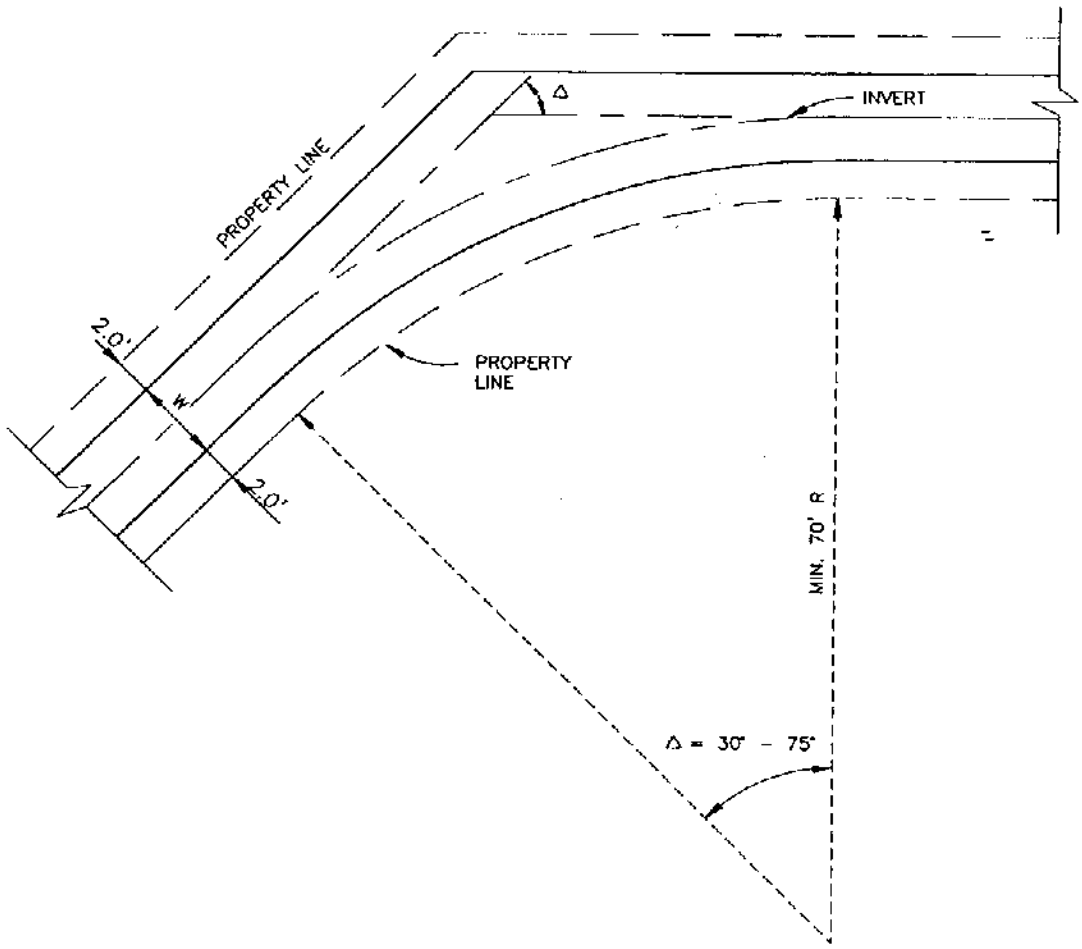

ALLEY TURN 30° – 75°

NTS

	ALLEY TURN 30° – 75°	STANDARD CONSTRUCTION DETAILS PAVING	
		DATE: 1999	SHEET: SD--P16

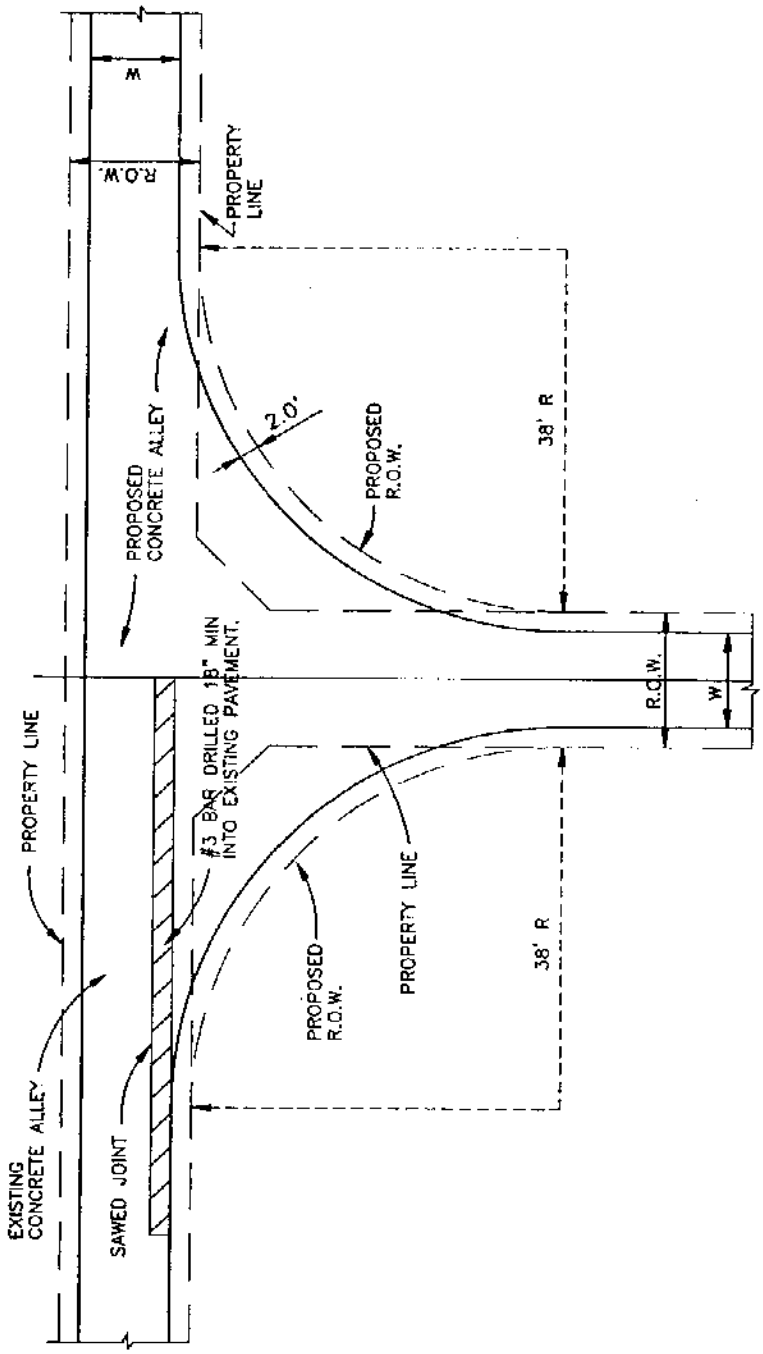

ALLEY INTERSECTING ALLEY

NTS

	ALLEY INTERSECTING ALLEY	STANDARD CONSTRUCTION DETAILS PAVING		
		DATE: 1999	REV DATE:	SHEET: SD-P17

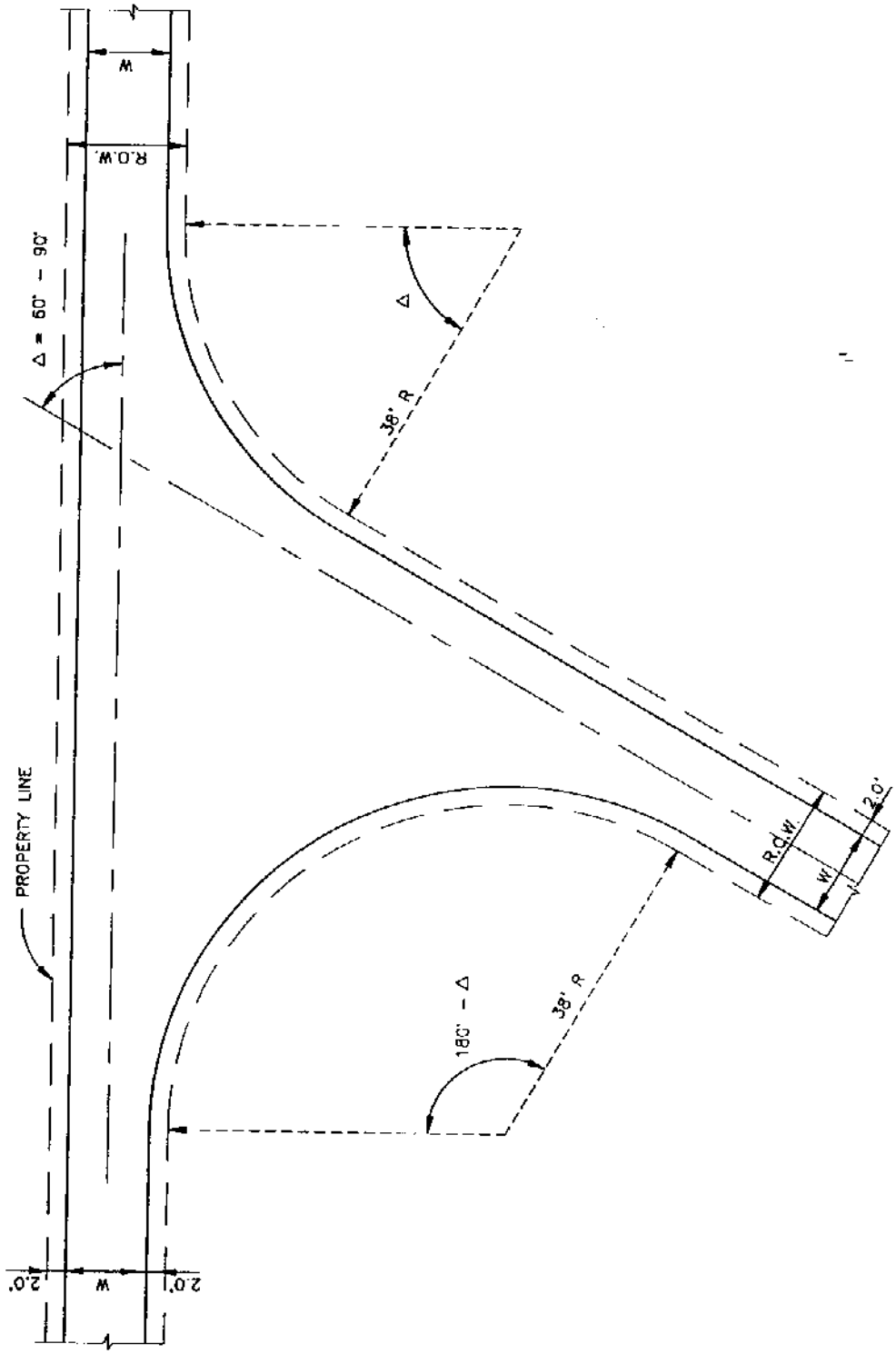

ALLEY TURN 60° - 90°

NTS

	ALLEY TURN 60° – 90°	STANDARD CONSTRUCTION DETAILS PAVING
		DATE: 1999 / SHEET: SD–P18

ALLEY WIDTH	A	B	C
12'	12'	2'-0"	16'
16'	16'	2'-0"	20'
20'	20'	2'-0"	24'

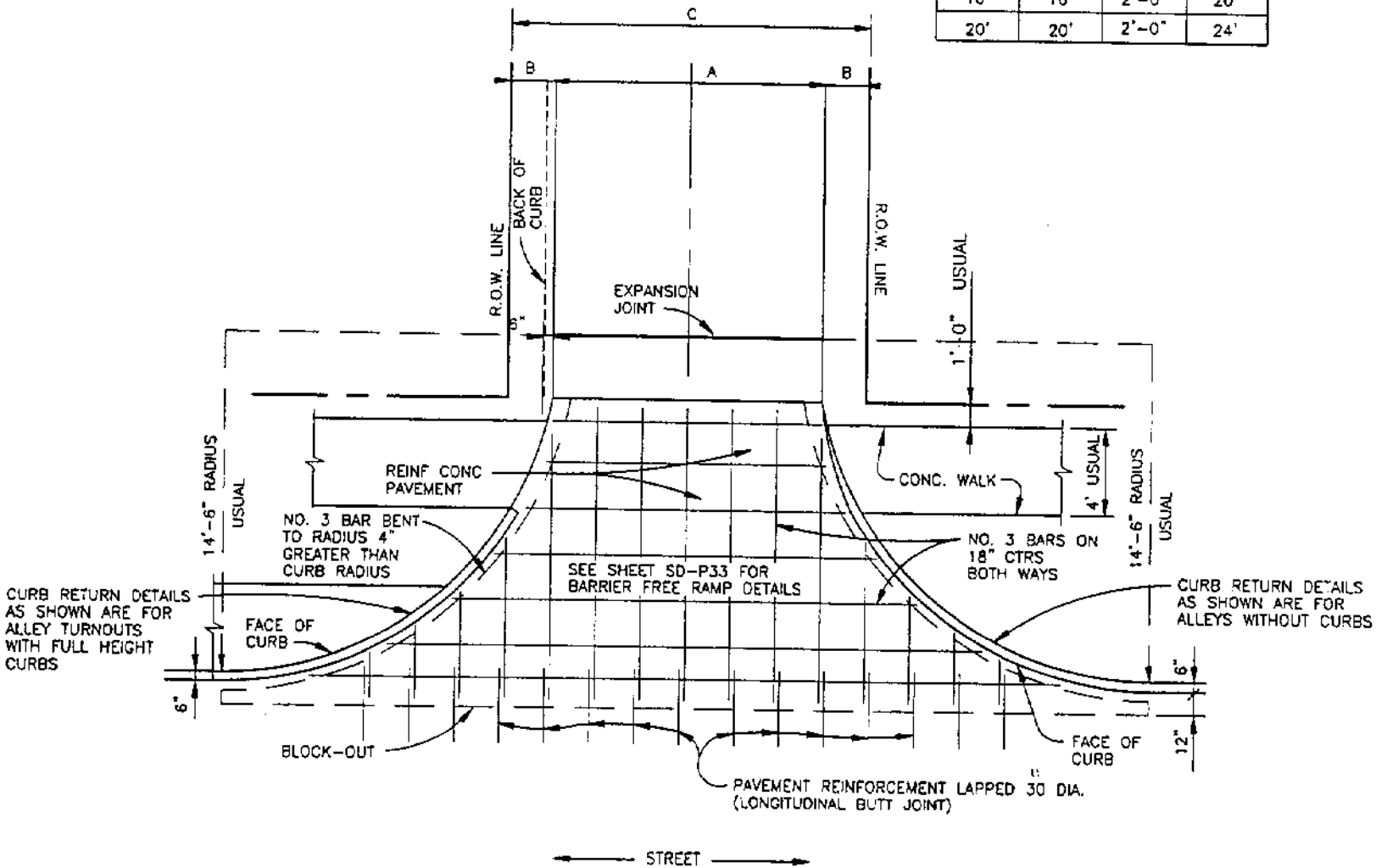

ALLEY RETURN DETAILS

NTS

ALLEY RETURN DETAILS

STANDARD CONSTRUCTION DETAILS
PAVING

DATE: 1999

SHEET: SD-P19

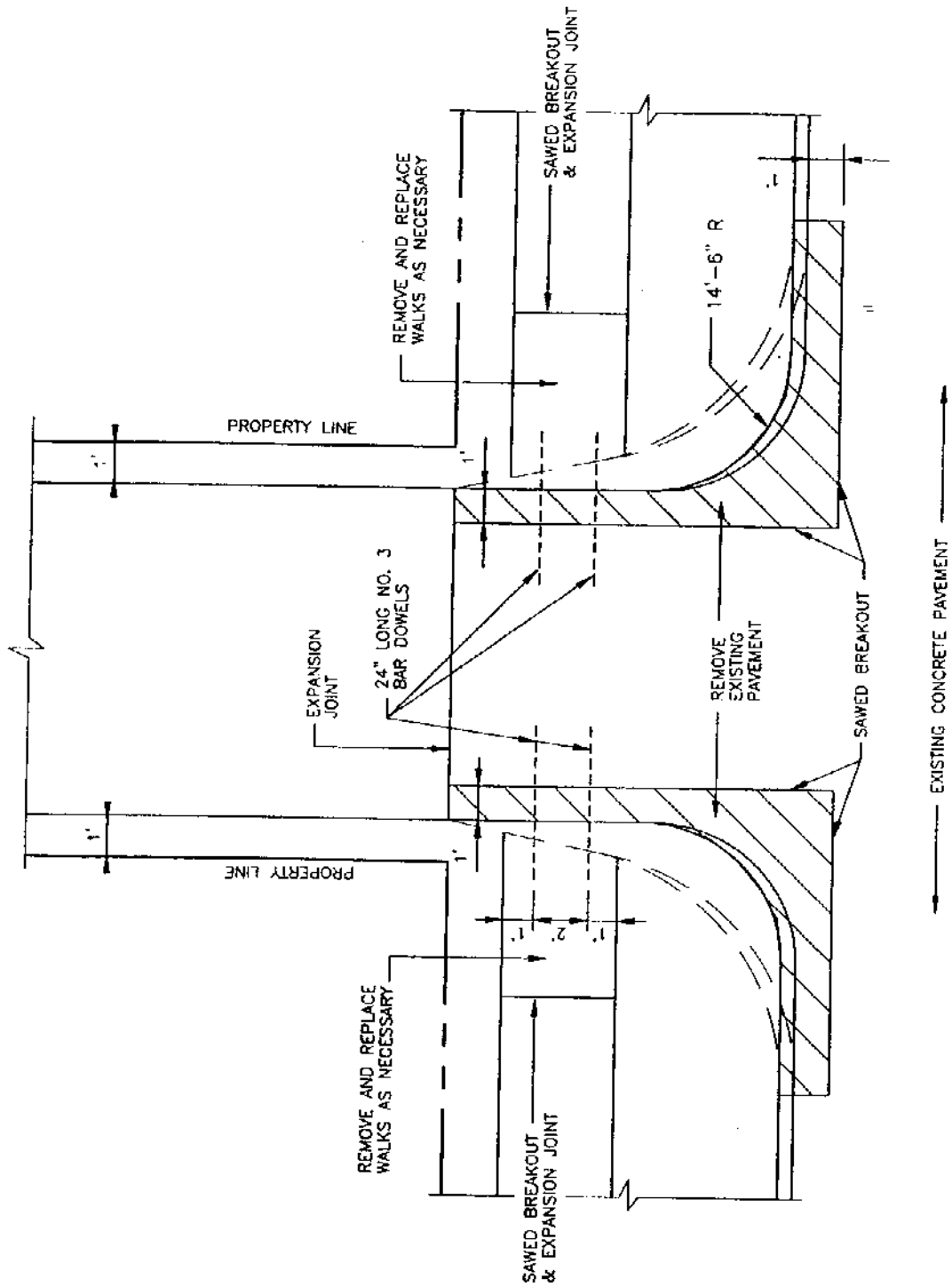

RETURN AT CONCRETE STREET

NTS

	EXISTING ALLEY RETURN MODIFICATIONS	STANDARD CONSTRUCTION DETAILS PAVING		
		DATE: 1999	REV DATE:	SHEET: SD-P20

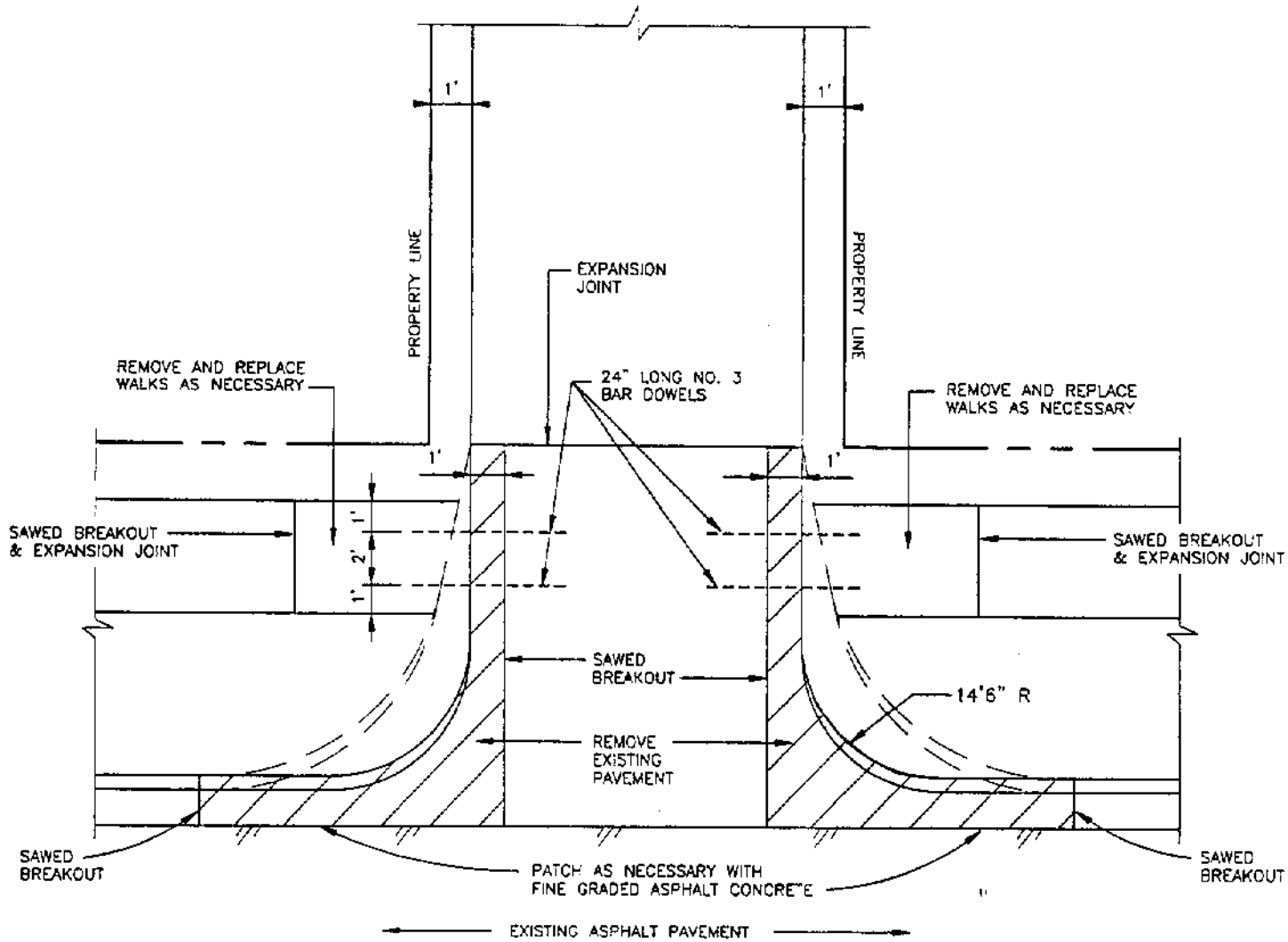

RETURN AT ASPHALT STREET
WITH CONCRETE CURB AND GUTTER

NTS

EXISTING ALLEY
RETURN MODIFICATIONS

STANDARD CONSTRUCTION DETAILS
PAVING

DATE: 1999

REV DATE:

SHEET: SD-P21

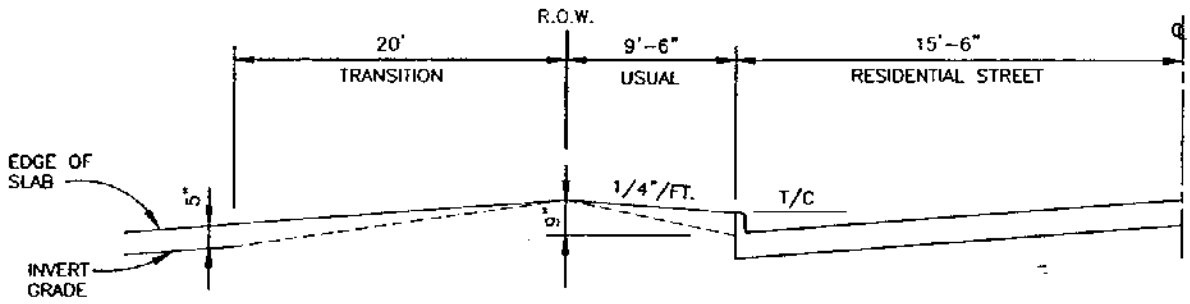

TYPE I ALLEY ENTRANCE

NTS

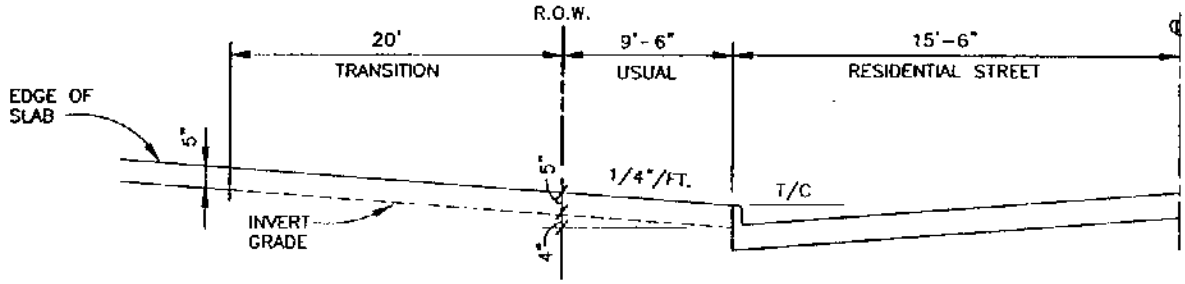

TYPE II ALLEY ENTRANCE

NTS

	ALLEY ENTRANCE INTO EXISTING STREET	STANDARD CONSTRUCTION DETAILS PAVING		
		DATE: 1999	REV DATE:	SHEET: SD-P22

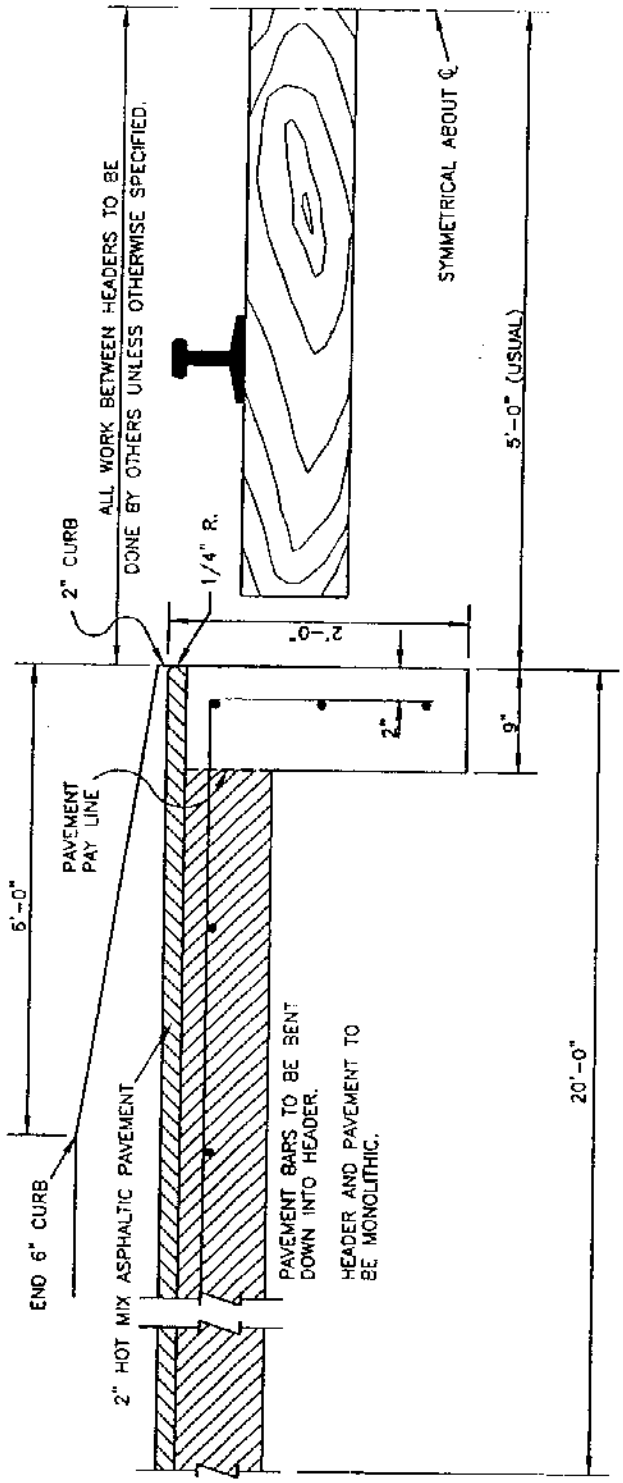

RAIL HEADER
NTS

	RAIL HEADER	STANDARD CONSTRUCTION DETAILS PAVING
		DATE: 1999 / SHEET: SD-P23

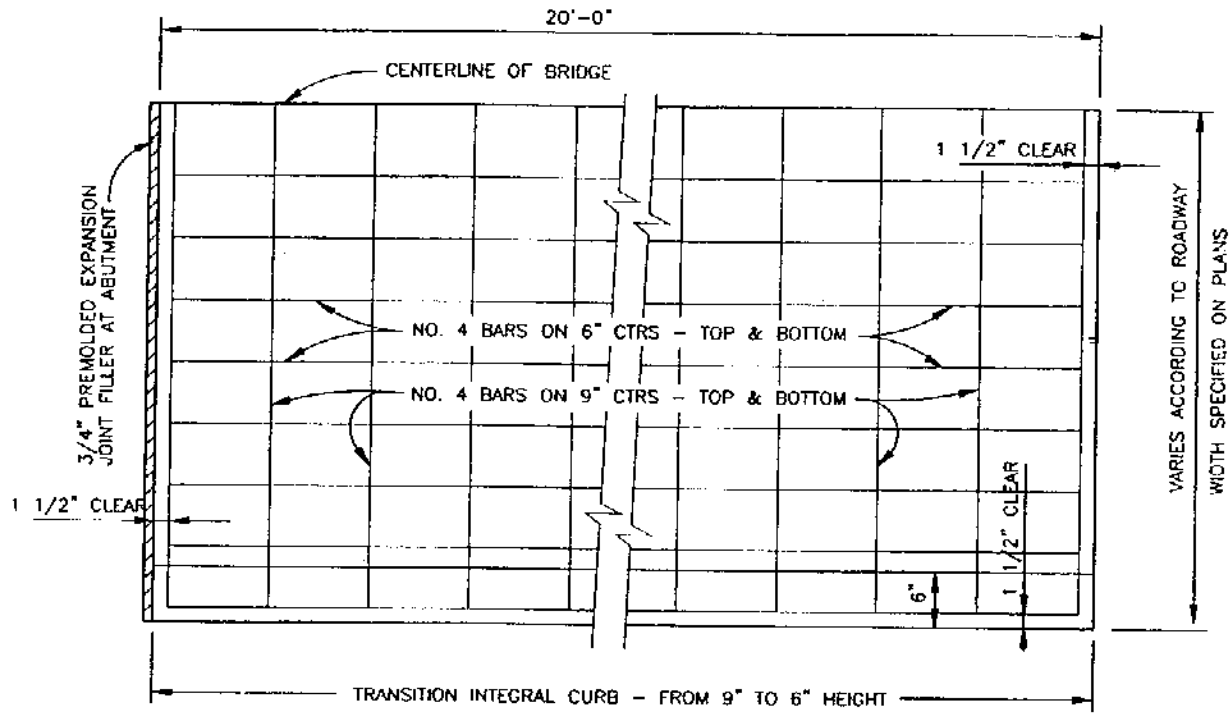

PLAN

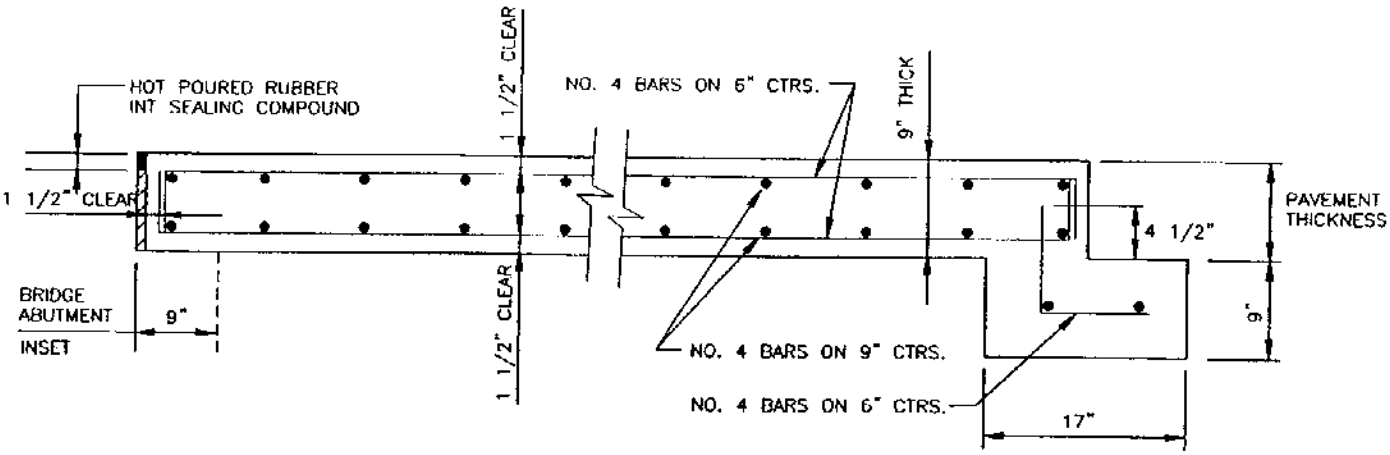

SECTION

BRIDGE APPROACH SLAB

NTS

	BRIDGE APPROACH SLAB	STANDARD CONSTRUCTION DETAILS PAVING	
		DATE: 1999	SHEET: SD-P24

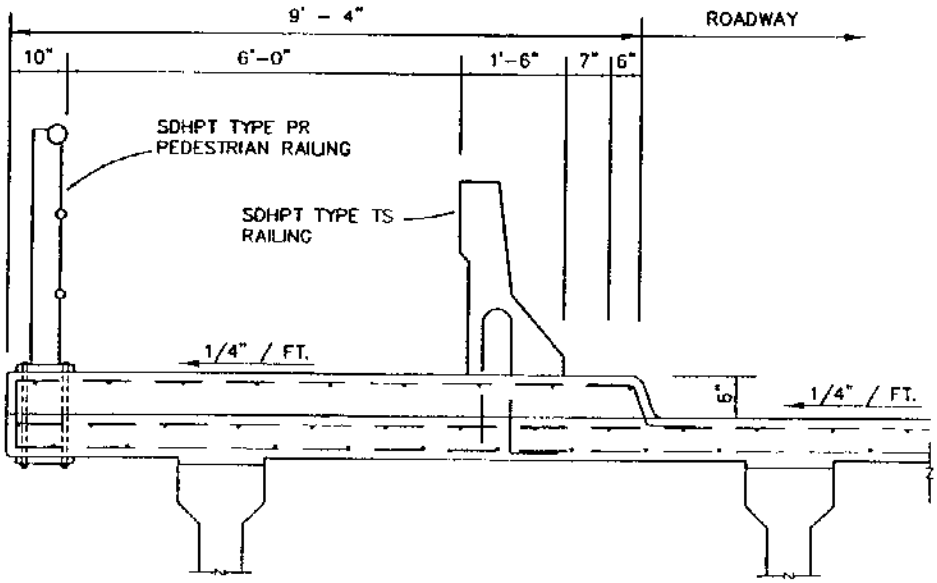

PEDESTRIAN AND TRAFFIC RAILS
FOR TYPE A, B, B+, C & D BRIDGES

N.T.S.

	PEDESTRIAN AND TRAFFIC RAILS	STANDARD CONSTRUCTION DETAILS PAVING	
		DATE: 1999	SHEET: SD-P25

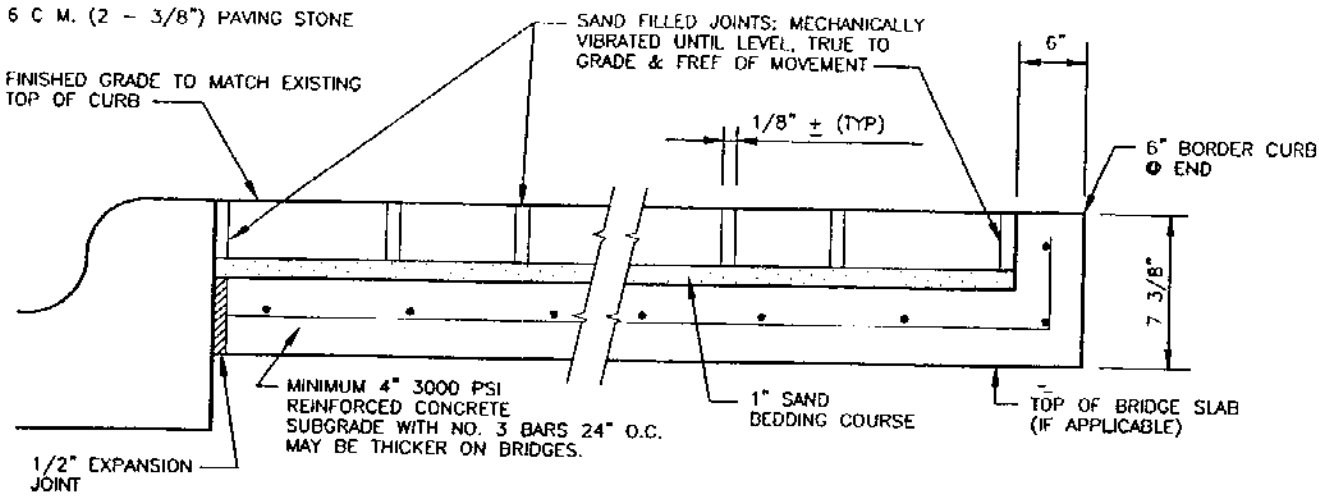

TYPICAL CROSS SECTION

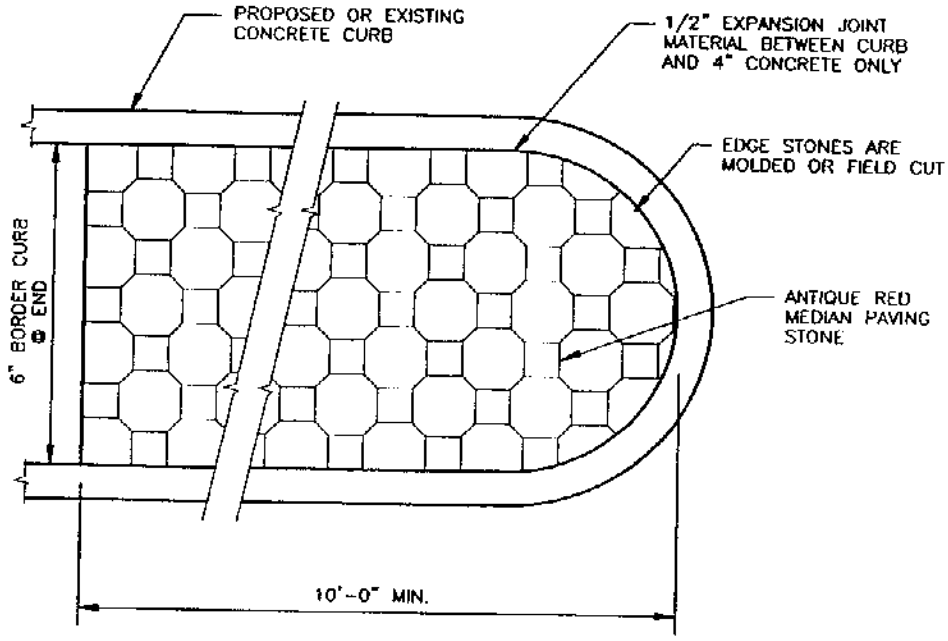

PLAN

MEDIAN PAVING SHALL EXTEND TO A POINT WHERE MEDIAN IS 6' WIDE.
IF MEDIAN IS 6' WIDE, PAVING SHALL EXTEND 15' FROM NOSE.
FOR MEDIANS WIDER THAN 6', PAVING SHALL EXTEND 10' FROM NOSE.
ALL DISTANCES ARE MINIMUM.

MEDIAN PAVING STONE DETAIL

NTS

PAVING STONE SHALL BE INTERLOCKING CONCRETE PER ITEMS 2.3.7 AND 5.8.8 OF THE SPECIAL PROVISIONS AND SHALL BE ANTIQUE RED COLOR.

NOTE : SEE SD-P01 FOR STREET PAVING STONE DETAILS.

	MEDIAN PAVING STONE DETAIL	STANDARD CONSTRUCTION DETAILS PAVING
		DATE: 1999 / SHEET: SD-P26

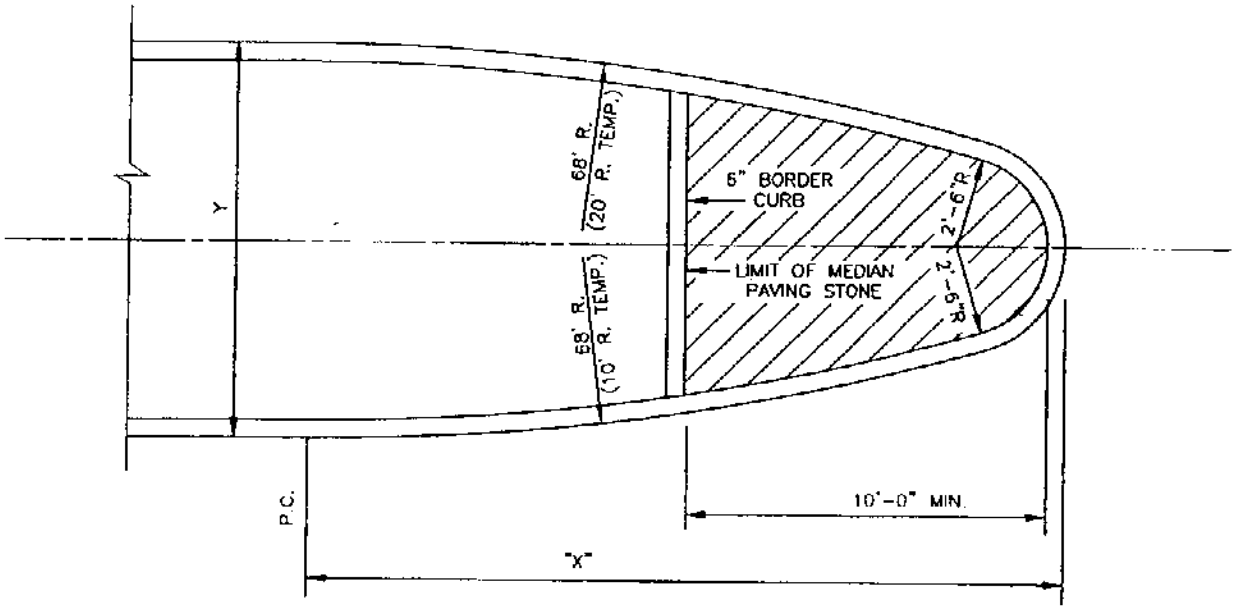

DETAIL OF NOSE MEDIAN ISLAND

NTS

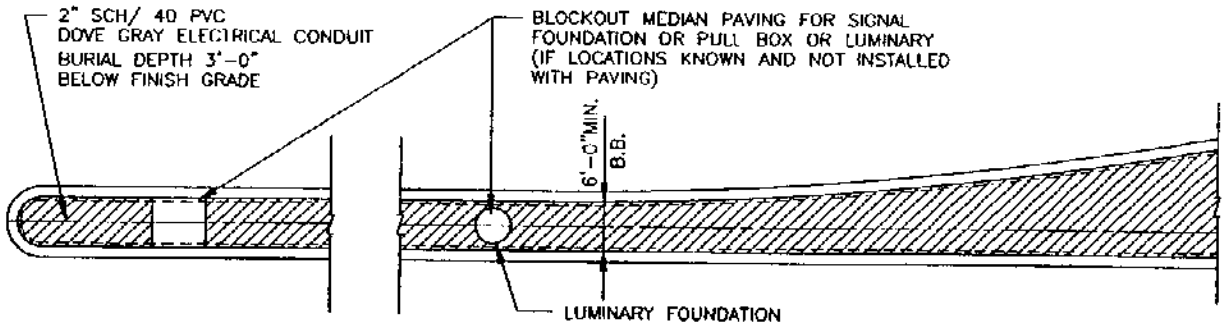

X = 13.90'	Y = 7.0'	X = 26.36'	Y = 14.0'
X = 16.44'	Y = 8.0'	X = 29.89'	Y = 17.0'
X = 18.06'	Y = 9.0'	X = 32.93'	Y = 20.0'
X = 20.42'	Y = 10.0'	X = 36.47'	Y = 24.0'

DETAIL OF MEDIAN PAVEMENT

NTS

	MEDIAN DETAILS	STANDARD CONSTRUCTION DETAILS PAVING	
		DATE: 1999	SHEET: SD-P27

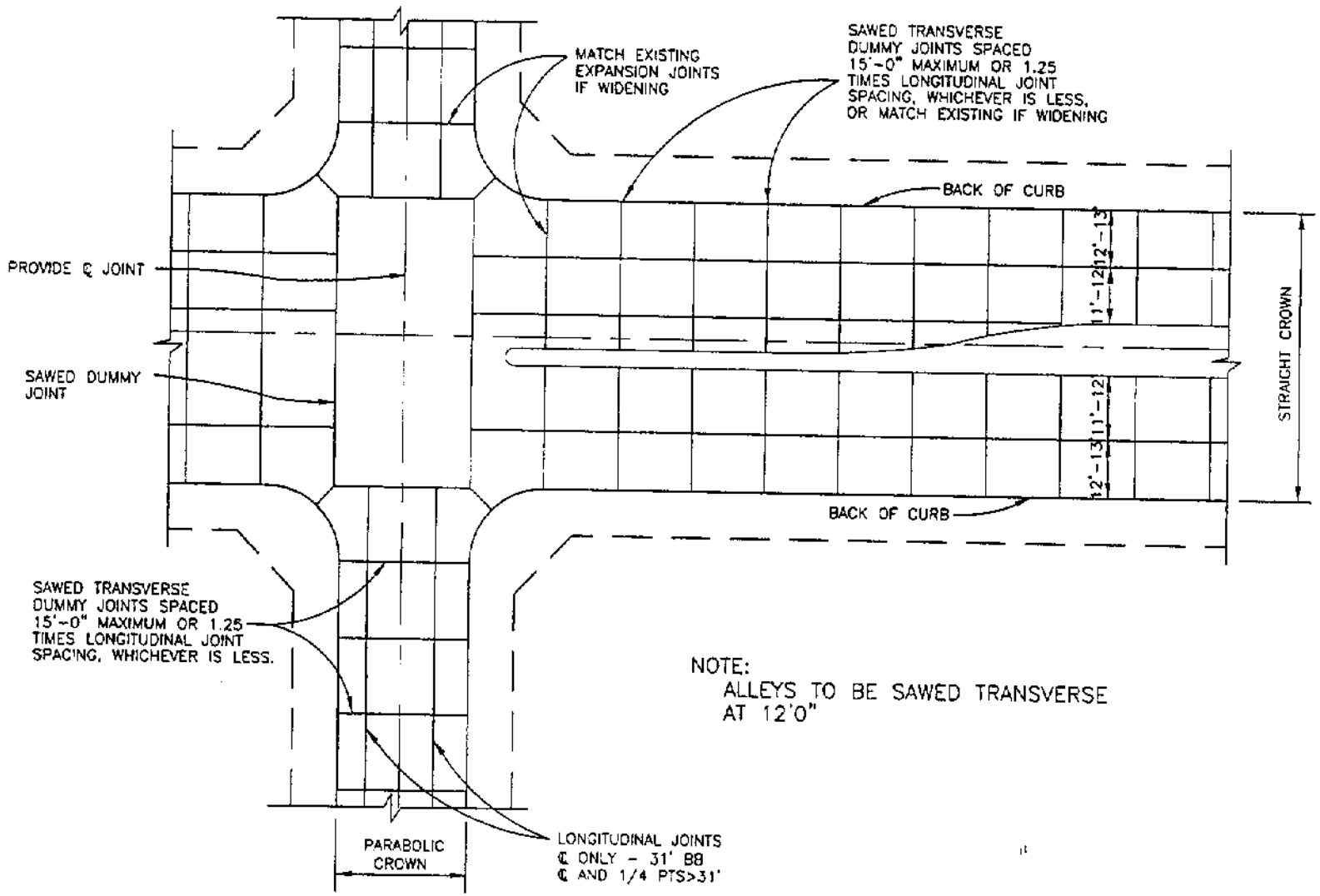

NOTE:
ALLEYS TO BE SAWED TRANSVERSE AT 12'0"

SPACING DIAGRAM FOR TRANSVERSE JOINTS

NTS

SPACING DIAGRAM FOR TRANSVERSE JOINTS

STANDARD CONSTRUCTION DETAILS
PAVING

DATE:	REV DATE:	SHEET:
1999		SD-P28

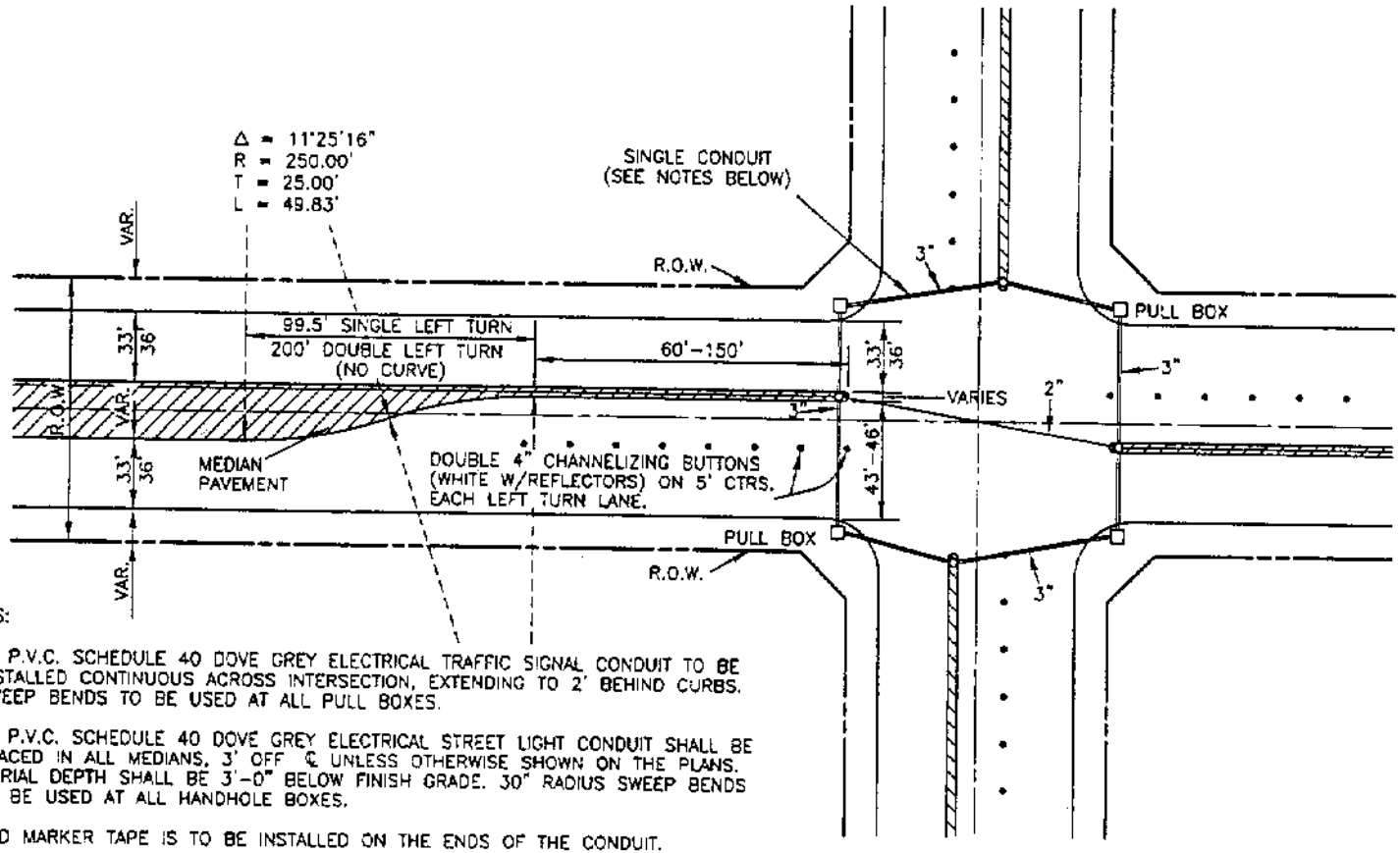

NOTES:

1. 3" P.V.C. SCHEDULE 40 DOVE GREY ELECTRICAL TRAFFIC SIGNAL CONDUIT TO BE INSTALLED CONTINUOUS ACROSS INTERSECTION, EXTENDING TO 2' BEHIND CURBS. SWEEP BENDS TO BE USED AT ALL PULL BOXES.

2. 2" P.V.C. SCHEDULE 40 DOVE GREY ELECTRICAL STREET LIGHT CONDUIT SHALL BE PLACED IN ALL MEDIANS, 3' OFF ℄ UNLESS OTHERWISE SHOWN ON THE PLANS. BURIAL DEPTH SHALL BE 3'-0" BELOW FINISH GRADE. 30" RADIUS SWEEP BENDS TO BE USED AT ALL HANDHOLE BOXES.

3. RED MARKER TAPE IS TO BE INSTALLED ON THE ENDS OF THE CONDUIT.

4. THE EXACT LOCATIONS WHERE THE CONDUIT CROSSES UNDER THE PAVING ARE TO BE CHISLED WITH AN "X" AND PAINTED WITH RED PAINT ON THE CURB OR PAVING.

5. A NO.9 GALVANIZED WIRE SHALL BE PLACED IN ALL CONDUIT. THIS WIRE SHALL EXTEND A MINIMUM OF 1' FROM THE END OF THE CONDUIT. ITEM 8.10.3

6. CONTACT T.U. ELECTRIC COMPANY PRIOR TO INSTALLING STREET LIGHT ELECTRIC CONDUIT. PLACEMENT OF ELECTRIC HANDHOLE BOXES SHALL BE AS DIRECTED BY T.U. ELECTRIC COMPANY. BOXES MAY BE OBTAINED FROM T.U. ELECTRIC.

7. TRAFFIC SIGNAL PULL BOXES SHALL BE #36 FROM TRAFFIC SIGNAL EQUIPMENT COMPANY, FORT WORTH, TEXAS OR APPROVED EQUAL. BOXES ARE APPROXIMATELY 10 1/2"x 17" x 12" AND SHALL BE PROVIDED WITH A CONCRETE COVER. BURIAL DEPTH OF 3" CONDUIT SHALL BE 18 INCHES BELOW CURB GRADES.

8. SEE SD-P30 FOR TYPICAL CONTOUR OF MAJOR/MAJOR INTERSECTION AND INTERSECTION WIDENING DETAIL.

TRAFFIC LIGHT CONDUIT PLAN

STANDARD CONSTRUCTION DETAILS
PAVING

DATE: 1999

SHEET: SD-P29

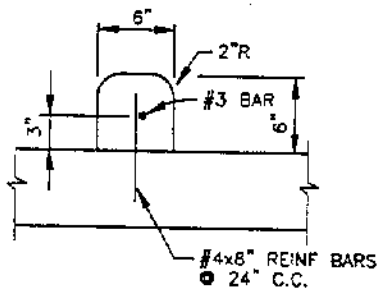

6" DOWELED ON CURB

LEGEND:
1. SAWED LONGITUDINAL DUMMY JOINT.
2. CONSTRUCTION JOINT (FULL WIDTH PVMT IS ALLOWED WHERE APPROVED BY THE CITY OF ALLEN) DELETE IF PAVING IS 25 FT WIDTH TO BE WIDENED LATER. INSTALL CURB PAVING IF LESS THAN FULL WIDTH OF 33' - 36'.

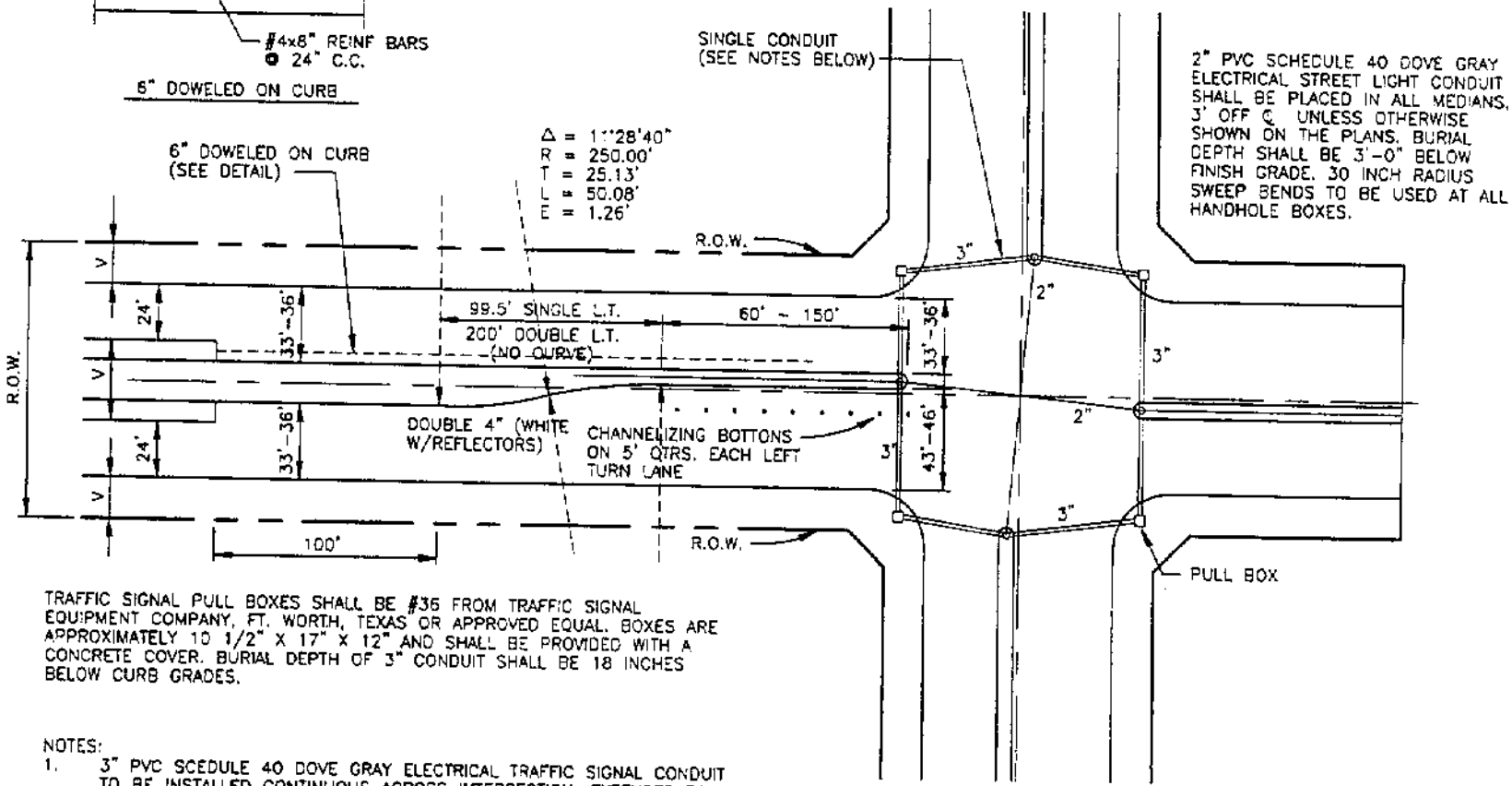

TRAFFIC SIGNAL PULL BOXES SHALL BE #36 FROM TRAFFIC SIGNAL EQUIPMENT COMPANY, FT. WORTH, TEXAS OR APPROVED EQUAL. BOXES ARE APPROXIMATELY 10 1/2" X 17" X 12" AND SHALL BE PROVIDED WITH A CONCRETE COVER. BURIAL DEPTH OF 3" CONDUIT SHALL BE 18 INCHES BELOW CURB GRADES.

NOTES:
1. 3" PVC SCEDULE 40 DOVE GRAY ELECTRICAL TRAFFIC SIGNAL CONDUIT TO BE INSTALLED CONTINUOUS ACROSS INTERSECTION, EXTENDED TO 2' BEHIND CURBS. SWEEP BENDS TO BE USED AT ALL PULL BOXES.
2. RED MARKER TAPE IS TO BE INSTALLED ON THE ENDS OF THE CONDUIT.
3. THE EXACT LOCATIONS WHERE THE CONDUIT CROSSES UNDER THE PAVING ARE TO BE CHISELED WITH AN "X" AND PAINTED WITH THE RED PAINT, ON THE CURB OR PAVING.
4. A NO. 9 GALVANIZED WIRE SHALL BE PLACED IN ALL CONDUIT. THIS WIRE SHALL EXTEND A MINIMUM OF 1' FROM THE END OF THE CONDUIT. ITEM 8.10.3.
5. CONTACT ELECTRIC COMPANY PRIOR TO INSTALLING STREET LIGHT ELECTRIC CONDUIT. PLACEMENT OF ELECTRIC MANHOLE BOXES SHALL BE AS DIRECTED BY TU ELECTRIC COMPANY. BOXES MAY BE OBTAINED FROM TU ELECTRIC.

INTERSECTION WIDENING DETAIL

NTS

INTERSECTION WIDENING DETAIL

STANDARD CONSTRUCTION DETAILS
PAVING

DATE:	REV DATE:	SHEET:
1999		SD-P30

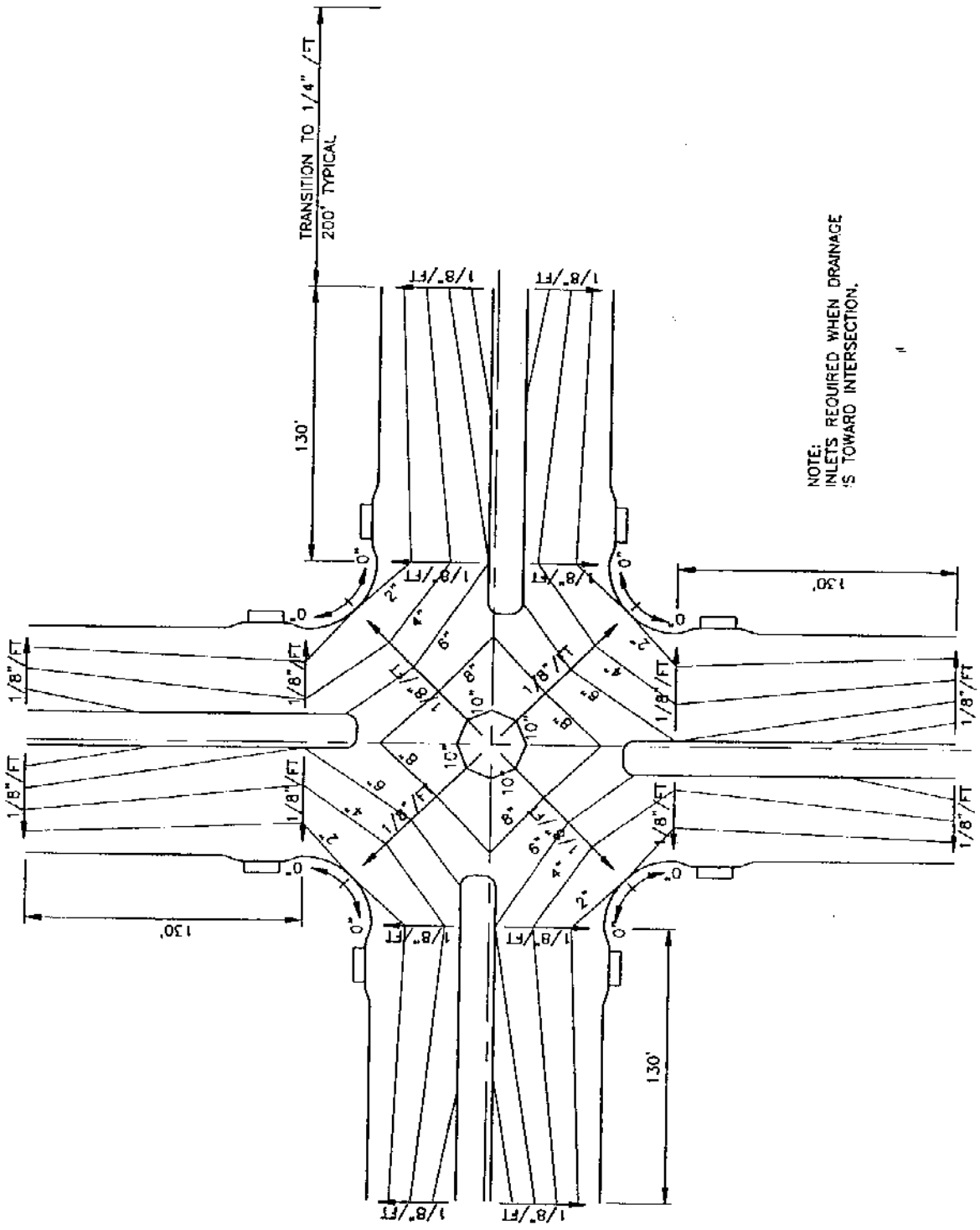

TYPICAL CONTOURS FOR
MAJOR–MAJOR INTERSECTION

NTS

	TYPICAL CONTOURS FOR MAJOR–MAJOR INTERSECTION	STANDARD CONSTRUCTION DETAILS PAVING
		DATE: 1999 / SHEET: SD–P31

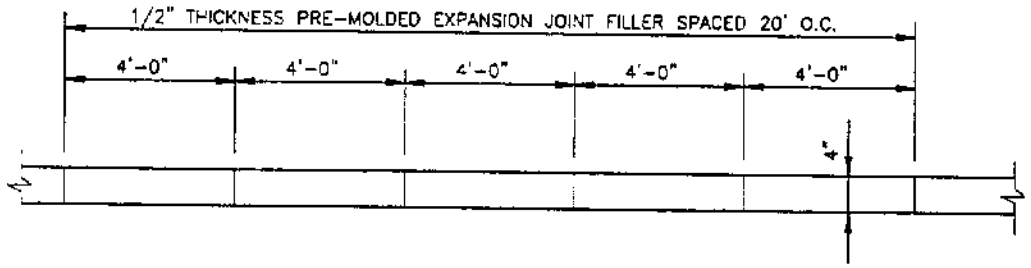

SIDE ELEVATION

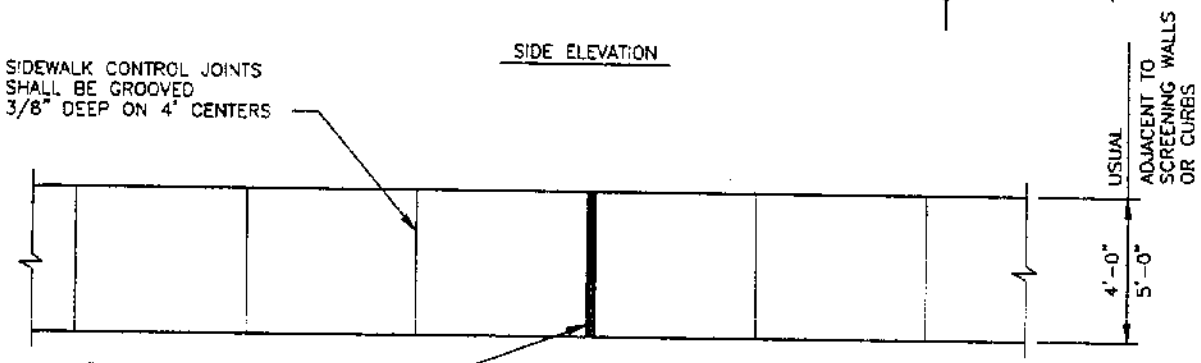

NOTE:
WHEN CONCRETE WALK IS ADJACENT TO CURB, DEPTH OF EXPANSION JOINT MATERIAL SHALL BE SUFFICIENT TO PREVENT CONCRETE TO CONCRETE CONTACT BETWEEN WALK AND CURB. WALK SHALL BE 5' WHEN NEXT TO CURB.

PLAN

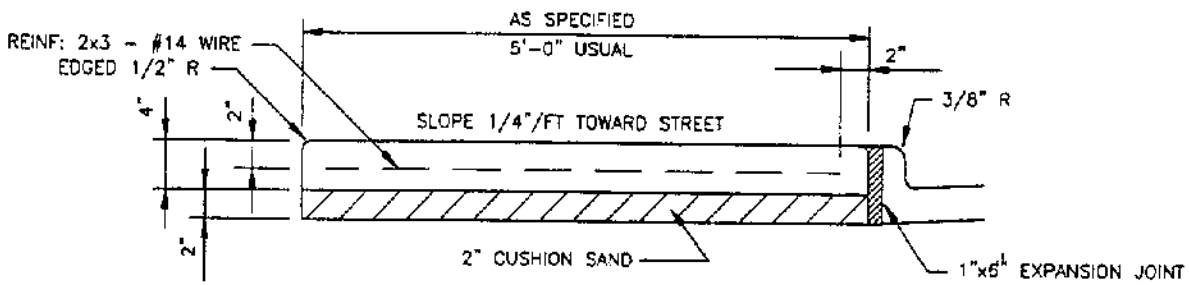

SECTION

CONCRETE SIDEWALK

NTS

CONCRETE SIDEWALK

STANDARD CONSTRUCTION DETAILS
PAVING

DATE: 1999

SHEET: SD-P32

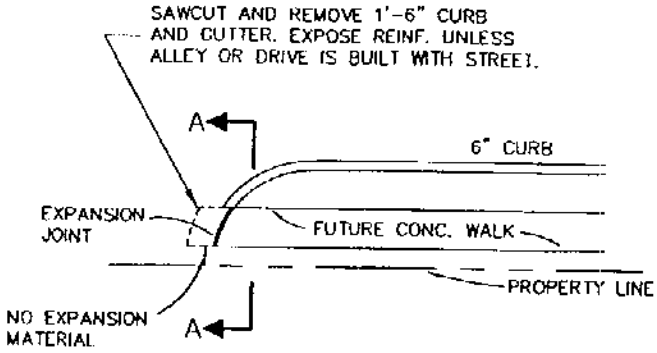

PLAN VIEW

N.T.S.

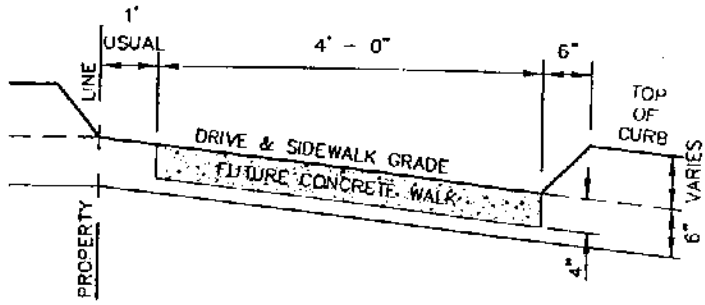

SECTION A-A

N.T.S.

BARRIER FREE RAMP AT DRIVE OR ALLEY

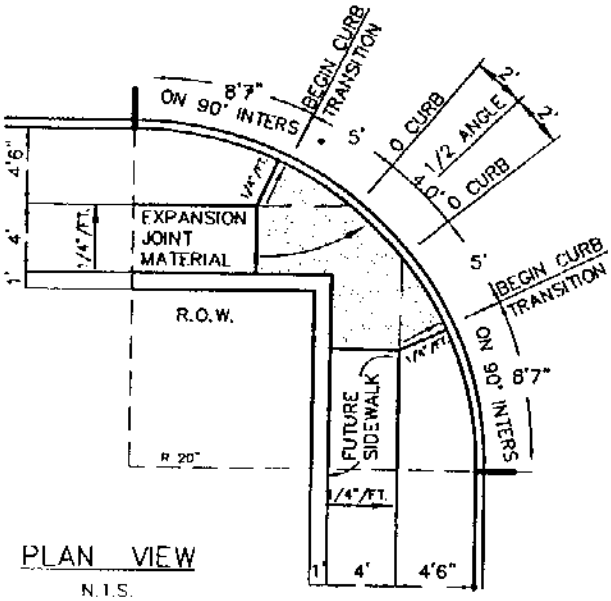

PLAN VIEW

N.T.S.

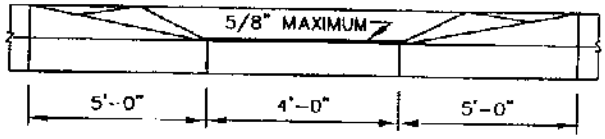

ELEVATION

N.T.S.

BARRIER FREE RAMP AT MINOR INTERSECTION

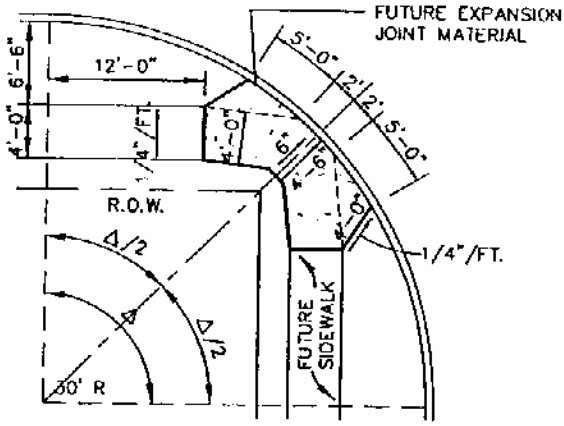

PLAN VIEW

N.T.S.

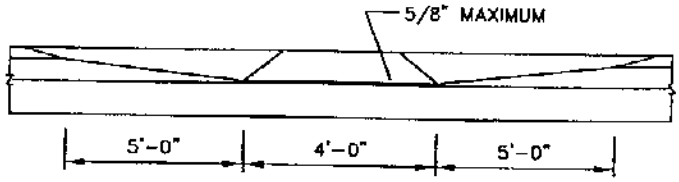

ELEVATION

N.T.S.

BARRIER FREE RAMP AT MAJOR INTERSECTION

	BARRIER FREE RAMPS	STANDARD CONSTRUCTION DETAILS PAVING	
		DATE: 1999	SHEET: SD-P33

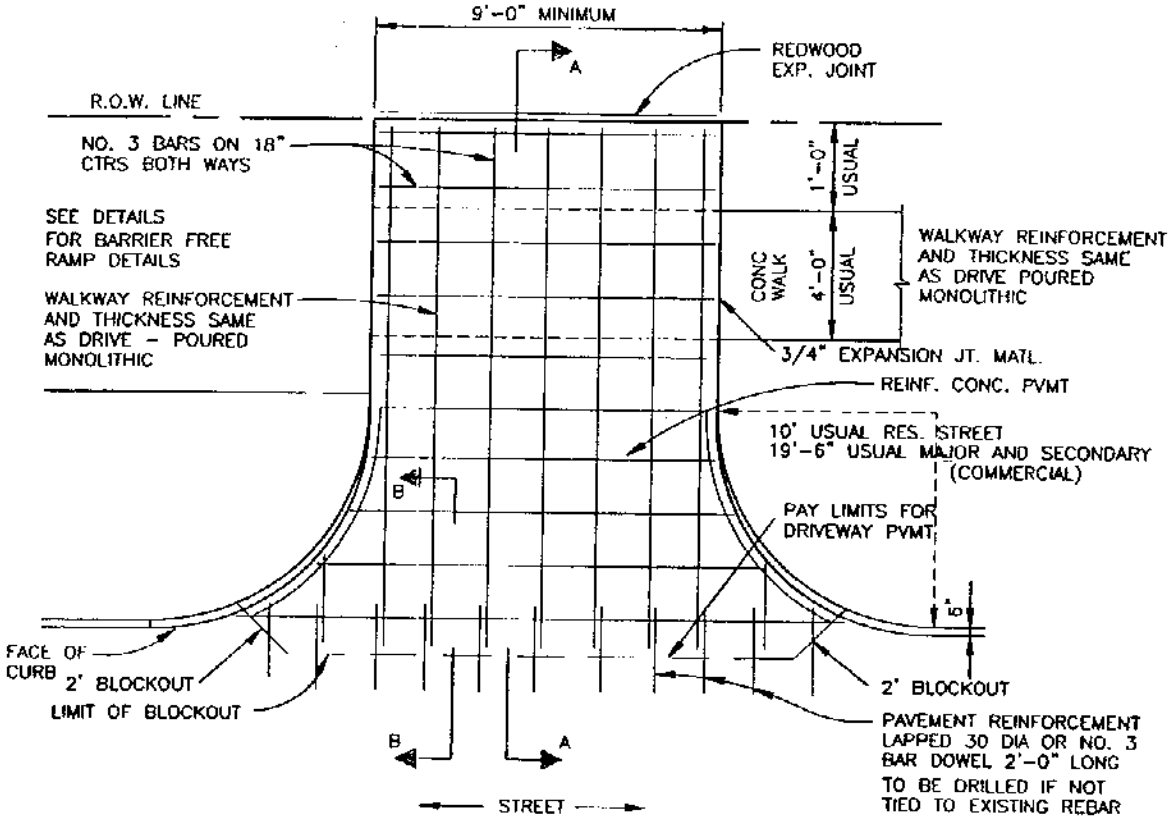

DRIVE RETURN TO STREET

NTS

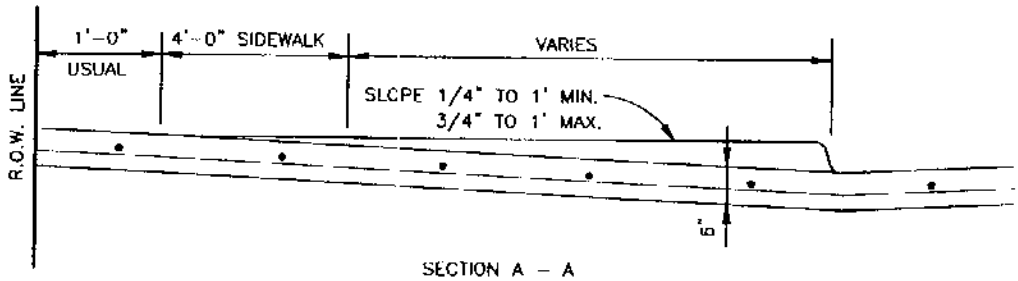

SECTION A - A

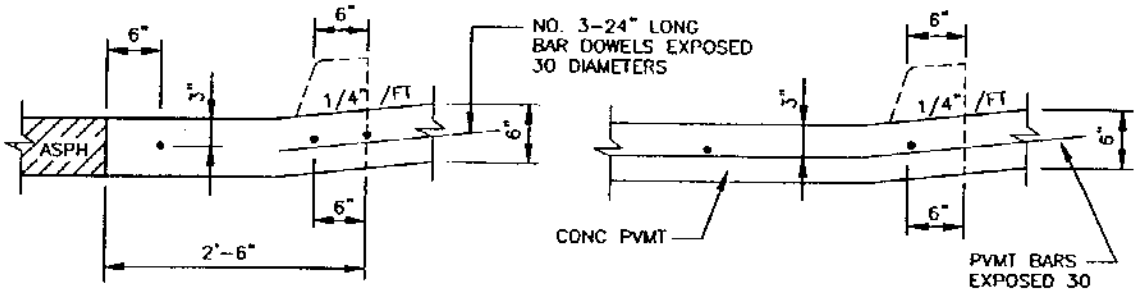

SECTION B - B

DRIVEWAY RETURN DETAILS

NTS

	DRIVEWAY RETURN DETAILS STREET	STANDARD CONSTRUCTION DETAILS PAVING		
		DATE: 1999	REV DATE:	SHEET: SD-P34

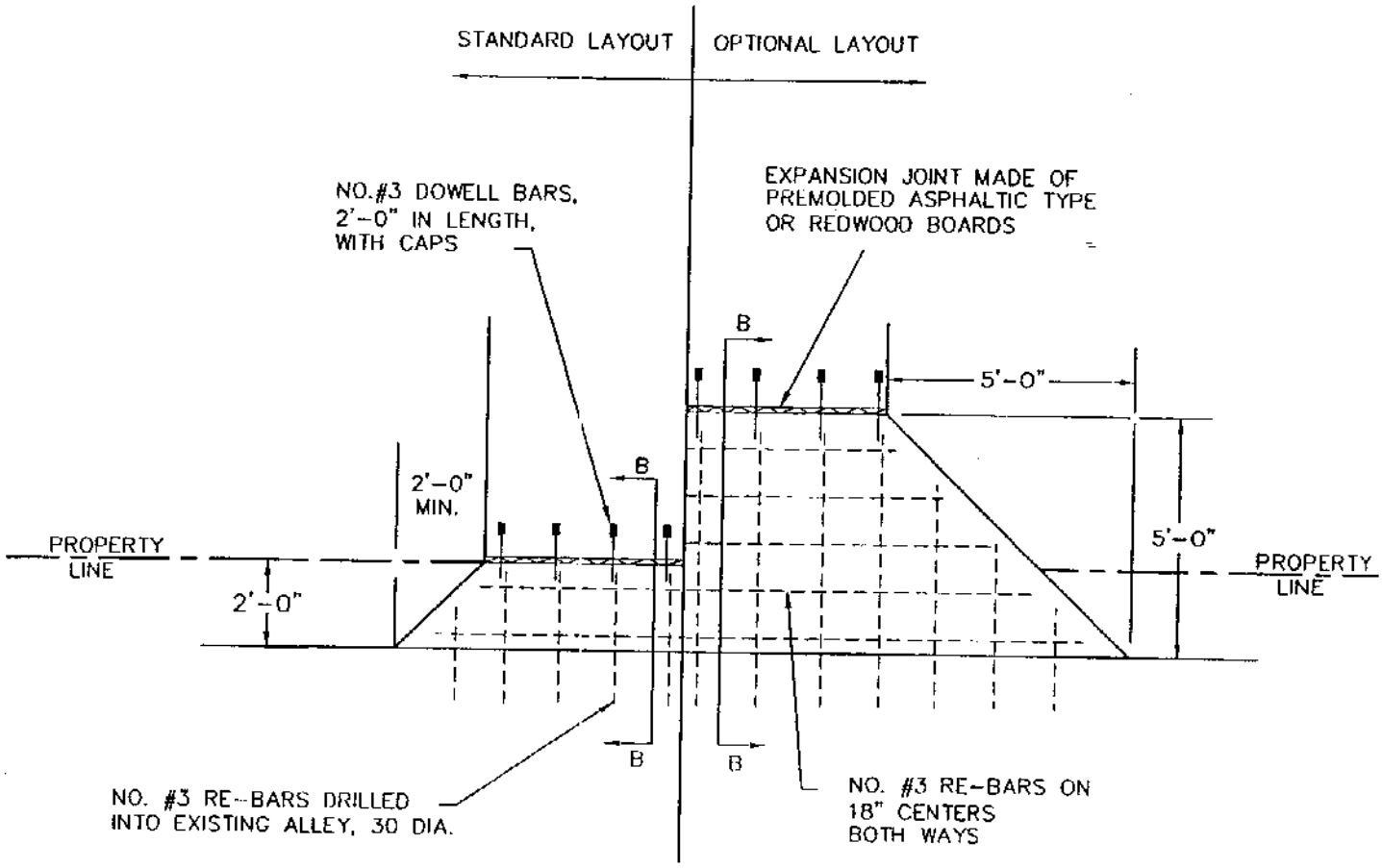

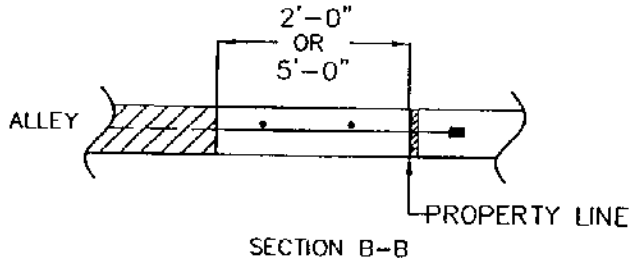

	DRIVEWAY RETURN DETAILS ALLEY	STANDARD CONSTRUCTION DETAILS PAVING		
		DATE: 1999	REV DATE:	SHEET: SD-P34A

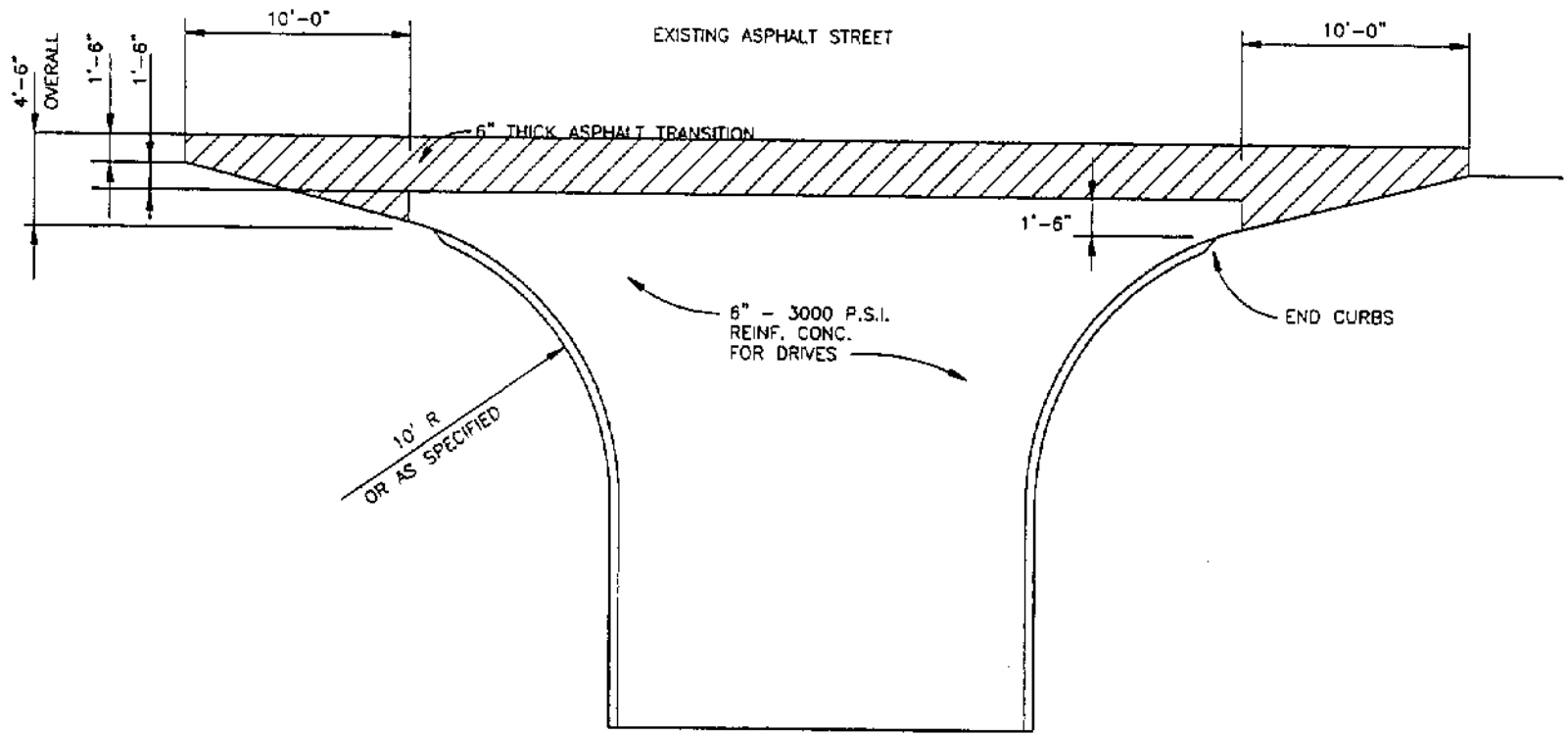

TYPICAL DRIVE OR STREET CONNECTION
TO EXISTING ASPHALT STREET

NTS

STREET CONNECTION

STANDARD CONSTRUCTION DETAILS
PAVING

DATE:	REV DATE:	SHEET:
1999		SD-P35

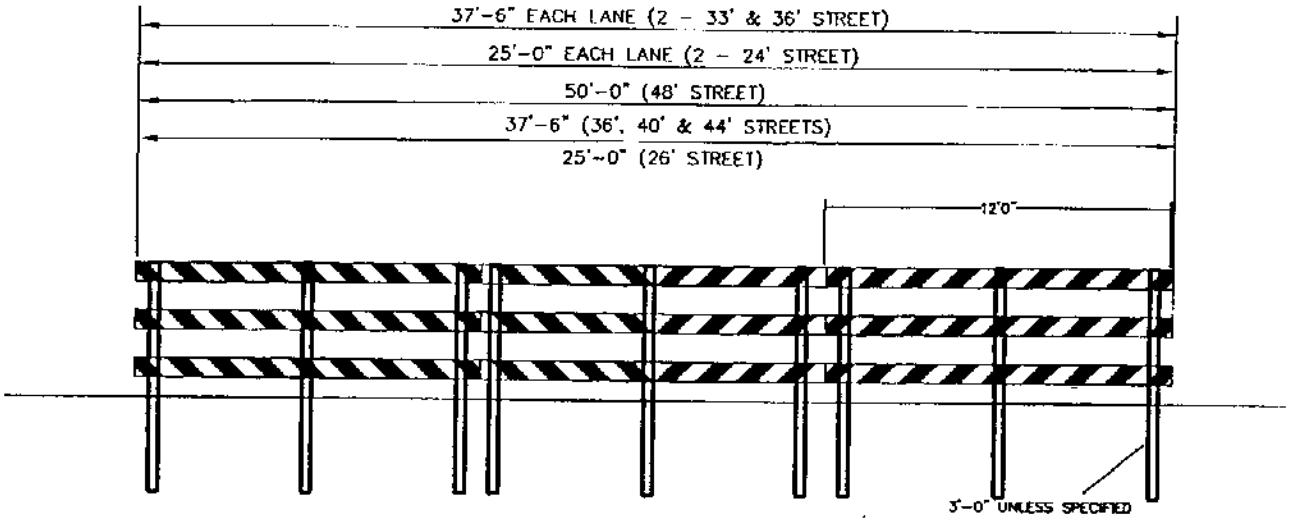

TYPE III

THE THREE RAILS ON TYPE III BARRICADES SHALL BE REFLECTIVE RED AND WHITE STRIPES ON ONE SIDE FACING ONE WAY TRAFFIC AND BOTH SIDES FOR TWO WAY TRAFFIC. STRIPE WIDTH = 6"

FRONT ELEVATION

NTS

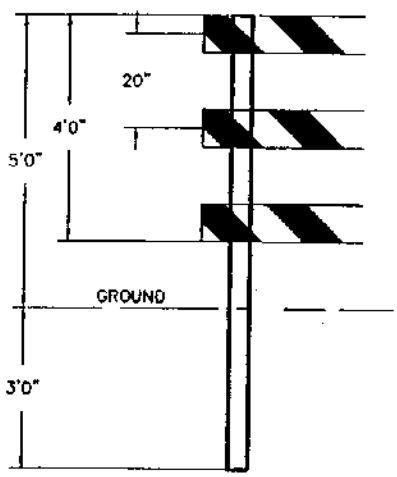

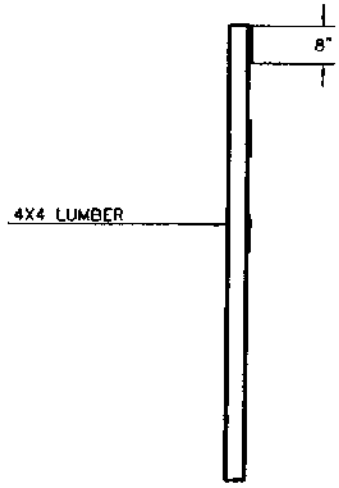

	TYPE III PERMANENT BARRICADE DETAIL	STANDARD CONSTRUCTION DETAILS PAVING		
		DATE: 1999	REV DATE:	SHEET: SD-P36

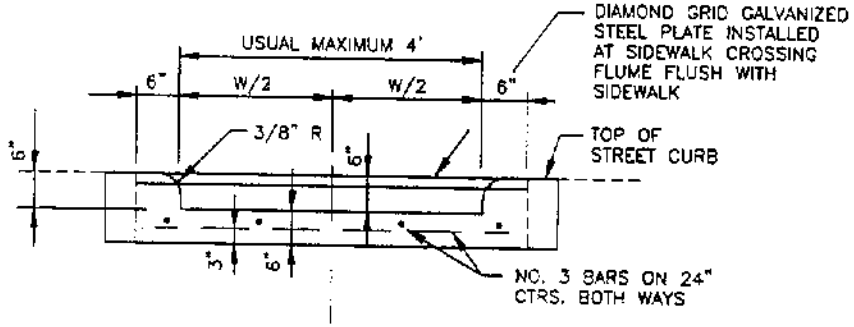

SECTION AT CURB FACE

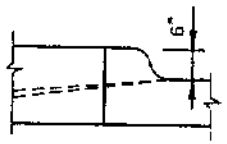

SECTION A – A

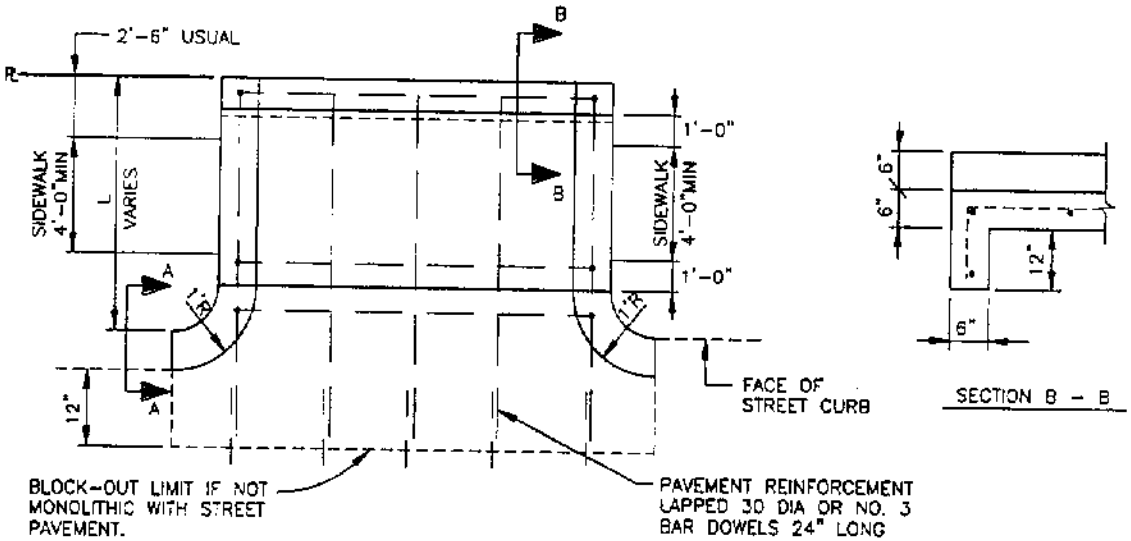

PLAN

SECTION B – B

STEEL PLATE FLUME COVER

SPAN FEET	PLATE THICKNESS INCHES
4	1/2"
6	5/8"
8	3/4"
10	7/8"

BASED ON 100 P.S.I. LIVE LOAD AND MAX. DEAD & LIVE LOAD DEFLECTION OF L/240 BOLT PLATE DOWN WITH BRASS BOLTS. BOLTS SHALL BE 1/2" DIA. RECESSED TO FLUSH WITH TOP OF PLATE AND SPACED A MAXIMUM OF 12" ON CENTERS. 1/2" DIA. SELF-DRILLING ANCHORS SHALL BE USED AND SPACED THE SAME.
SURFACE OF PLATE SHALL BE A NON-SKID MATERIAL.

FLUME

NTS

FLUME

STANDARD CONSTRUCTION DETAILS
PAVING

DATE: 1999

SHEET: SD-P37

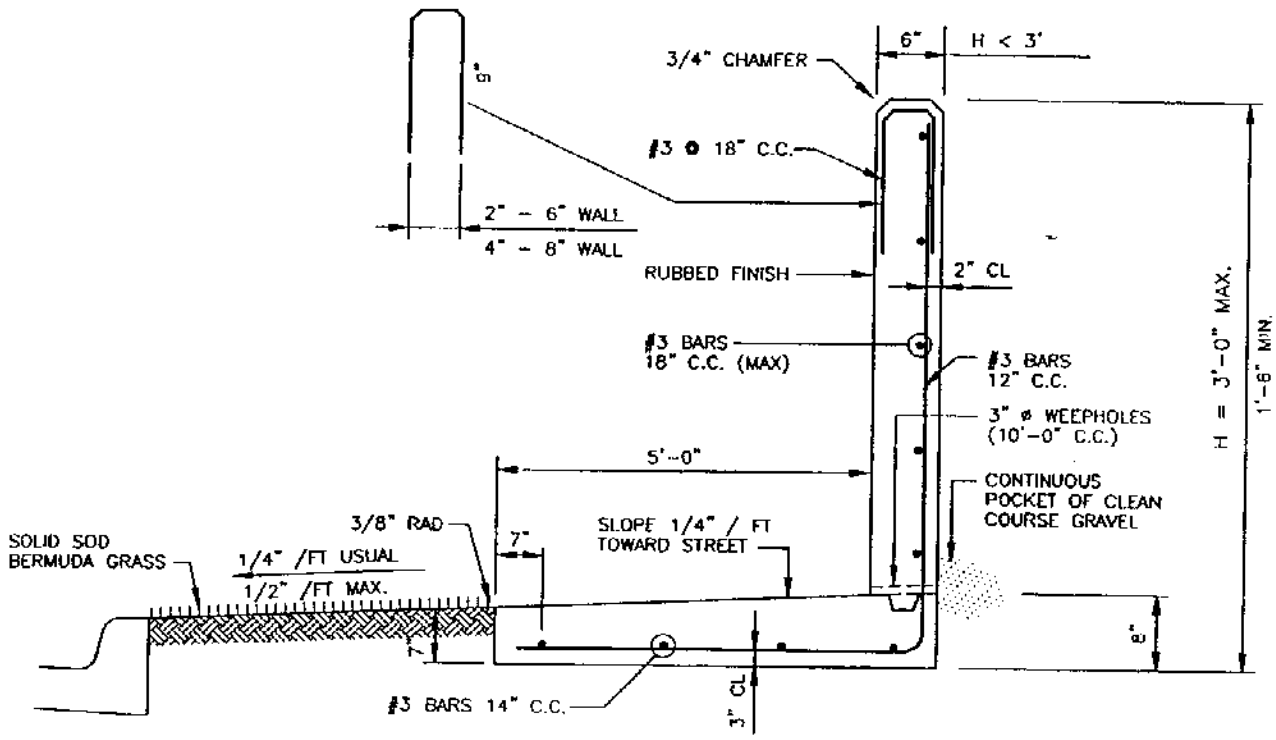

TYPE 6 RETAINING WALL

NTS

	TYPE 6 RETAINING WALL	STANDARD CONSTRUCTION DETAILS PAVING
		DATE: 1999 / SHEET: SD-P38

GENERAL NOTES:

1. CONCRETE – MINIMUM STRENGTH, 3000 P.S.I. @ 28 DAYS.
2. REINFORCEMENT – ASTM A 36.
3. MASONRY – COMPRESSIVE STRENGTH SHALL BE AS PRESCRIBED IN ITEM 23.6 SPECIAL PROVISIONS.
4. WIND LOAD – 20 P.S.F.
5. PIER BEARING STRESSES – SEE BRICK SCREENING WALL NOTES.
6. MORTAR – TYPE "S".
7. PROVIDE CONTROL JOINTS @ 50 FEET.
8. PROVIDE EXPANSION JOINTS @ 200 FEET ON CENTER MAXIMUM.
9. WHERE THERE IS NO ALLEY PAVEMENT, PROVIDE MINIMUM 9 FEET IN CLAY OR 6'–0" MINIMUM WITH 3'–0" MINIMUM INTO ROCK.
10. ALL EXPOSED CONCRETE SHALL HAVE A RUBBED FINISHED SURFACE.
11. SIDEWALKS ADJACENT TO WALLS MUST BE 5'–0" MINIMUM WIDTH FROM ALL PORTIONS OF THE WALL (INCLUDING PILASTERS, COLUMNS, ETC.).
12. MAXIMUM PILASTER SPACING 40 FEET.
13. WALLS ON THE LINE OF SIGHT EASEMENT AT CORNERS, WILL NOT HAVE A TOP ELEVATION GREATER THAN 30" ABOVE THE NEAREST GUTTER ELEVATION.
14. THE WALL SHALL BE A MINIMUM OF SIX FEET IN HEIGHT AS MEASURED FROM THE NEAREST ALLEY EDGE OR SIDEWALK GRADE, WHICHEVER IS HIGHER. THE COLOR OF THE WALL SHALL BE LIMITED TO EARTH–TONE COLORS, EXCLUDING GRAY, GREEN AND WHITE. THE COLOR OF THE WALL SHALL BE UNIFORM ON EACH SIDE OF A THOROUGHFARE FOR THE ENTIRE LENGTH BETWEEN TWO INTERSECTING THOROUGHFARES, UNLESS OTHERWISE APPROVED BY THE ENGINEERING DEPARTMENT. THE FINISH OF THE WALL SHALL BE CONSISTENT ON ALL SURFACES.

GENERAL NOTES BRICK SCREENIG WALLS	STANDARD CONSTRUCTION DETAILS PAVING	
	DATE: 1999	SHEET: SD–P39

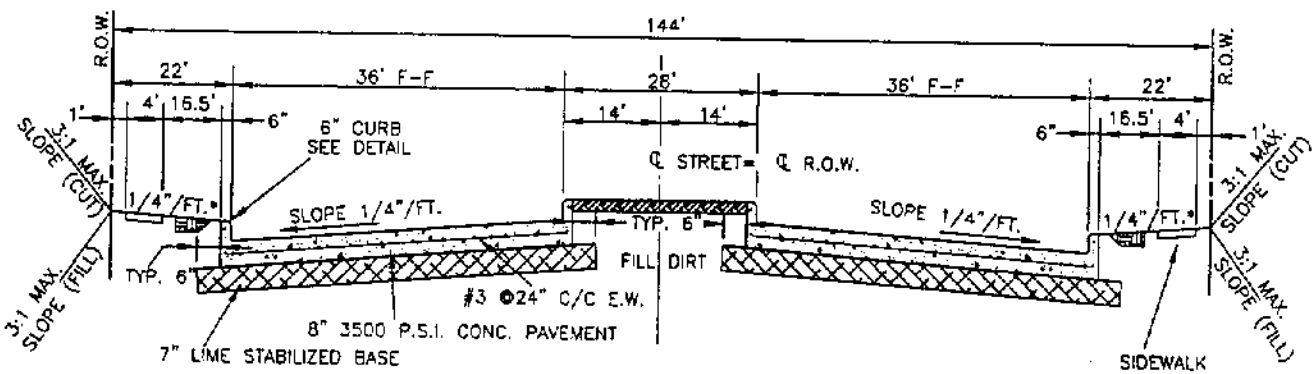

EXPRESSWAY TYPE A

NTS

* 1/4"/FT. MIN. SLOPE & 3/4"/FT. MAX. SLOPE

EXPRESSWAY TYPE A

STANDARD CONSTRUCTION DETAILS
PAVING

DATE: 1999

REV DATE:

SHEET: SD-P40

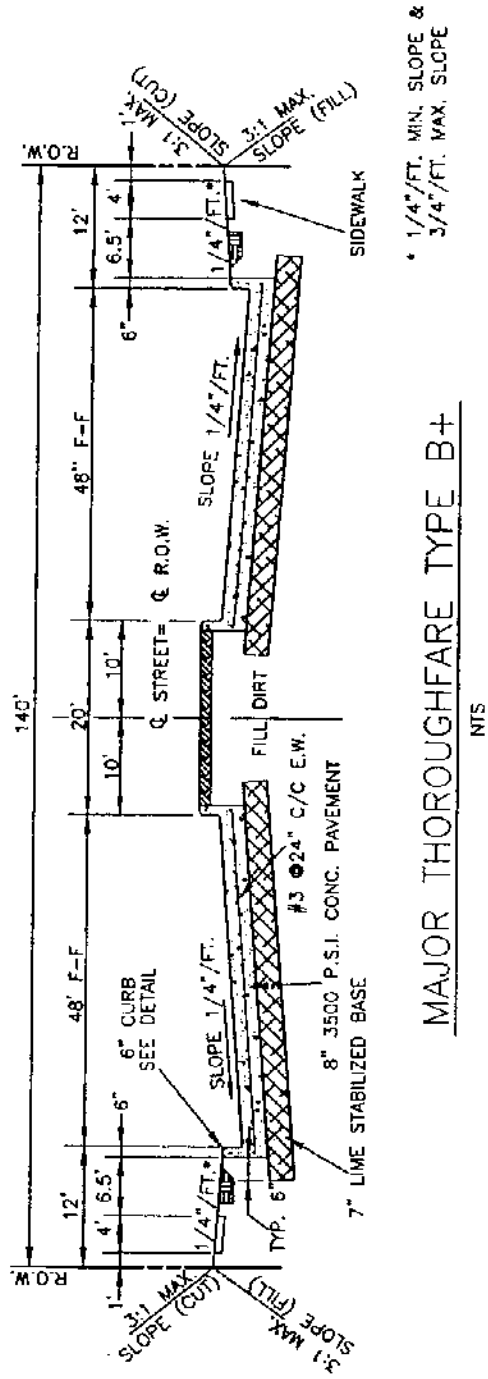

* 1/4"/FT. MIN. SLOPE &
3/4"/FT. MAX. SLOPE

MAJOR THOROUGHFARE TYPE B+

NTS

	MAJOR THOROUGHFARE TYPE B+	STANDARD CONSTRUCTION DETAILS PAVING		
		DATE: 1999	REV DATE:	SHEET: SD-P41

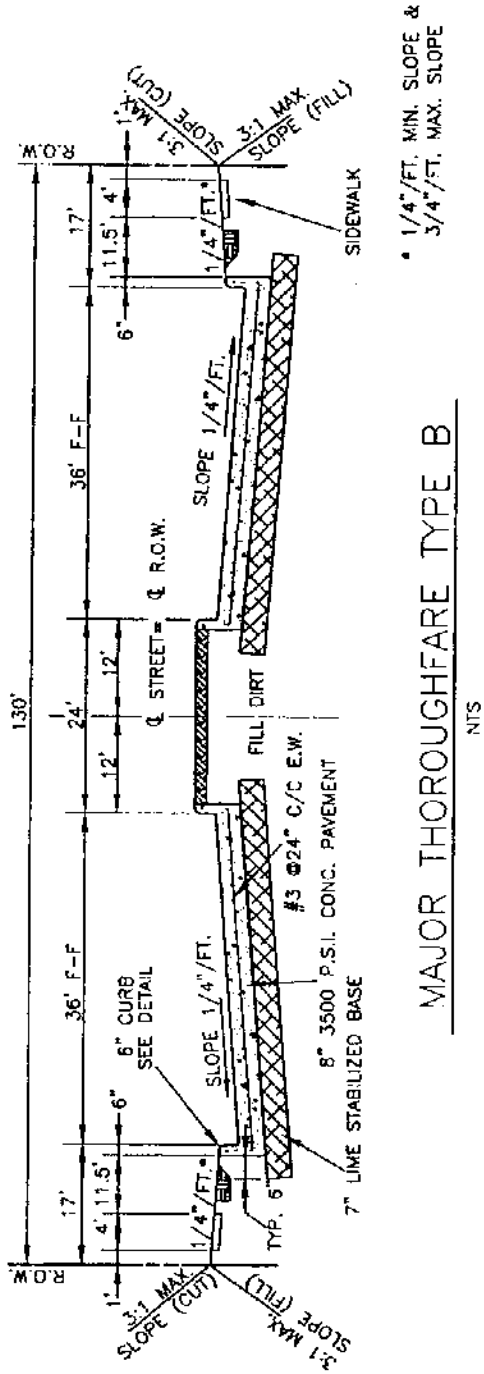

MAJOR THOROUGHFARE TYPE B

NTS

	MAJOR THOROUGHFARE TYPE B	STANDARD CONSTRUCTION DETAILS PAVING		
		DATE: 1999	REV DATE:	SHEET: SD-P42

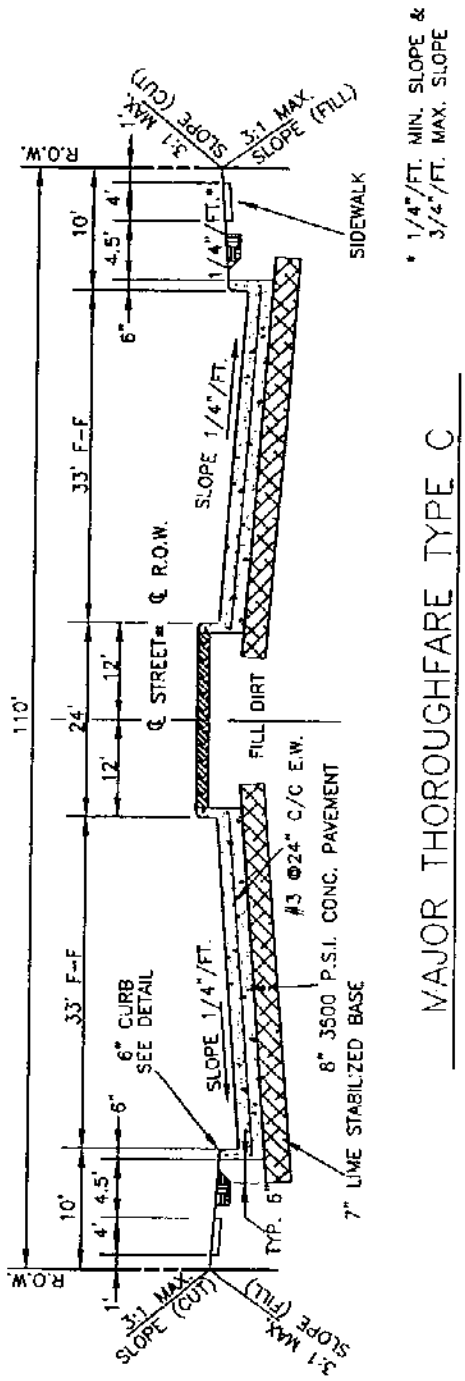

* 1/4"/FT. MIN. SLOPE &
3/4"/FT. MAX. SLOPE

MAJOR THOROUGHFARE TYPE C

NTS

	MAJOR THOROUGHFARE TYPE C	STANDARD CONSTRUCTION DETAILS PAVING		
		DATE: 1999	REV DATE:	SHEET: SD-P43

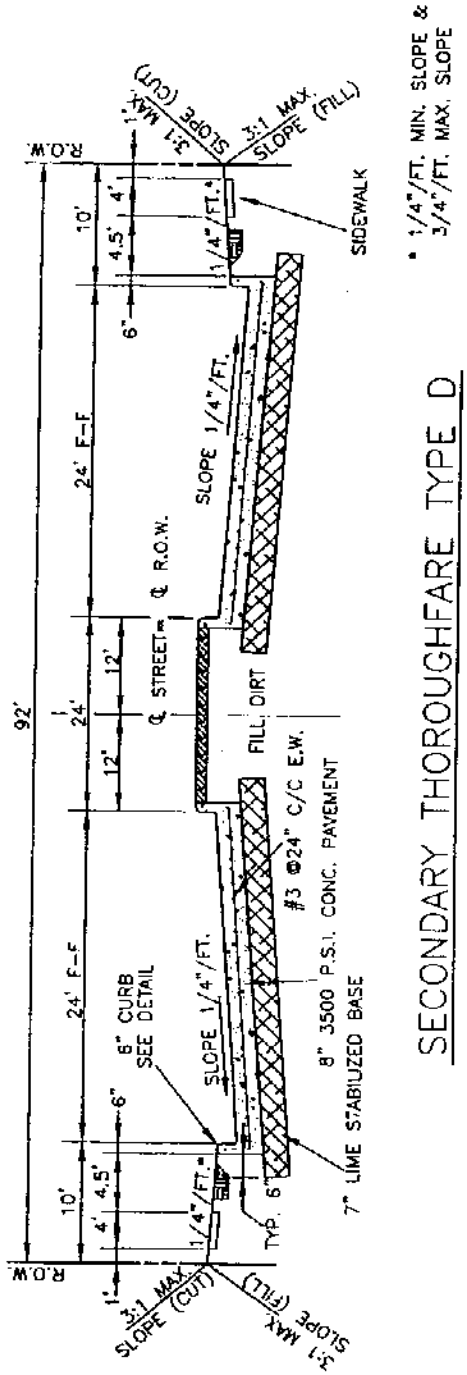

SECONDARY THOROUGHFARE TYPE D

NTS

	SECONDARY THOROUGHFARE TYPE D	STANDARD CONSTRUCTION DETAILS PAVING		
		DATE: 1998	REV DATE:	SHEET: SD-P45

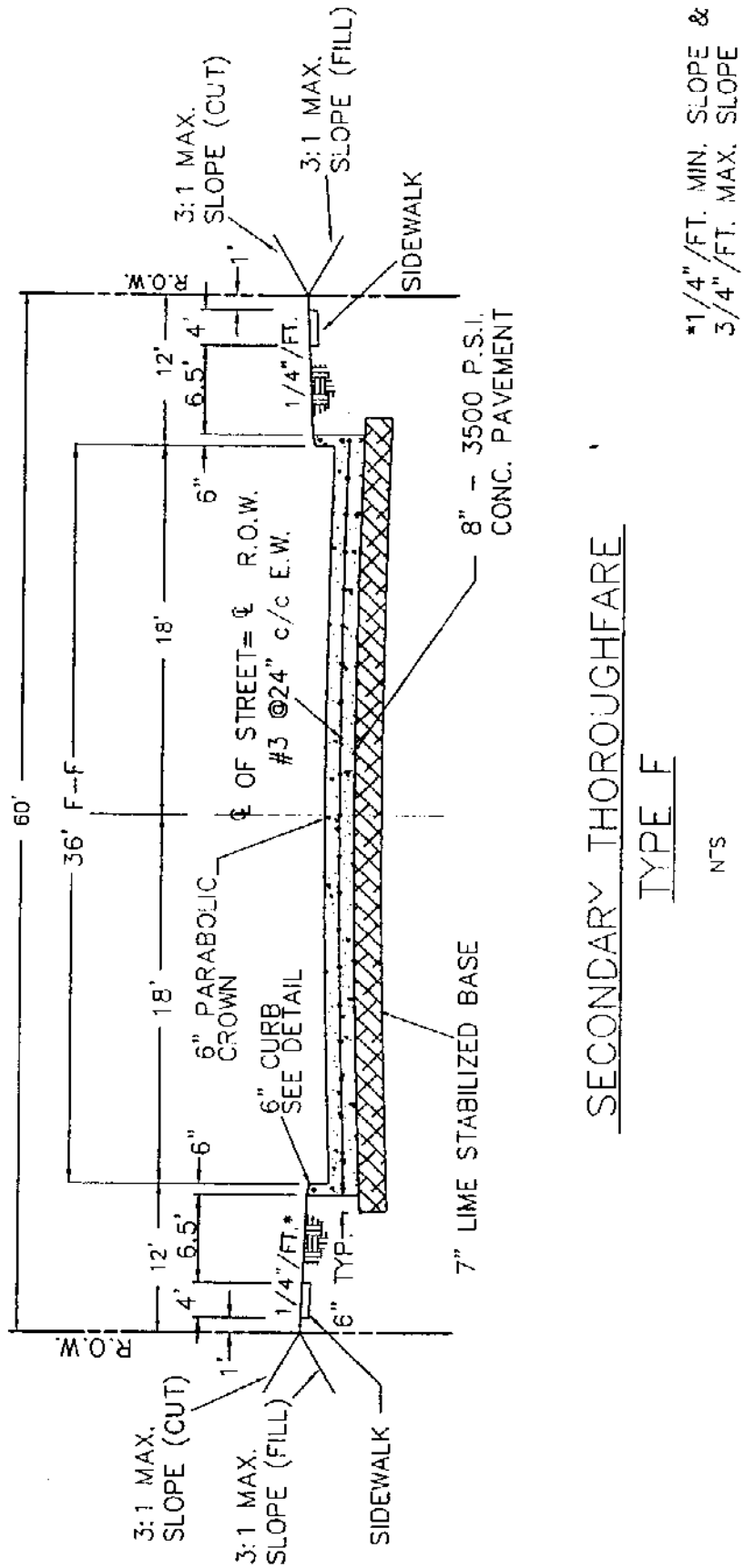

SECONDARY THOROUGHFARE
TYPE F

N.T.S.

	SECONDARY THOROUGHFARE TYPE F	STANDARD CONSTRUCTION DETAILS PAVING		
		DATE: 1999	REV DATE:	SHEET: SD P44

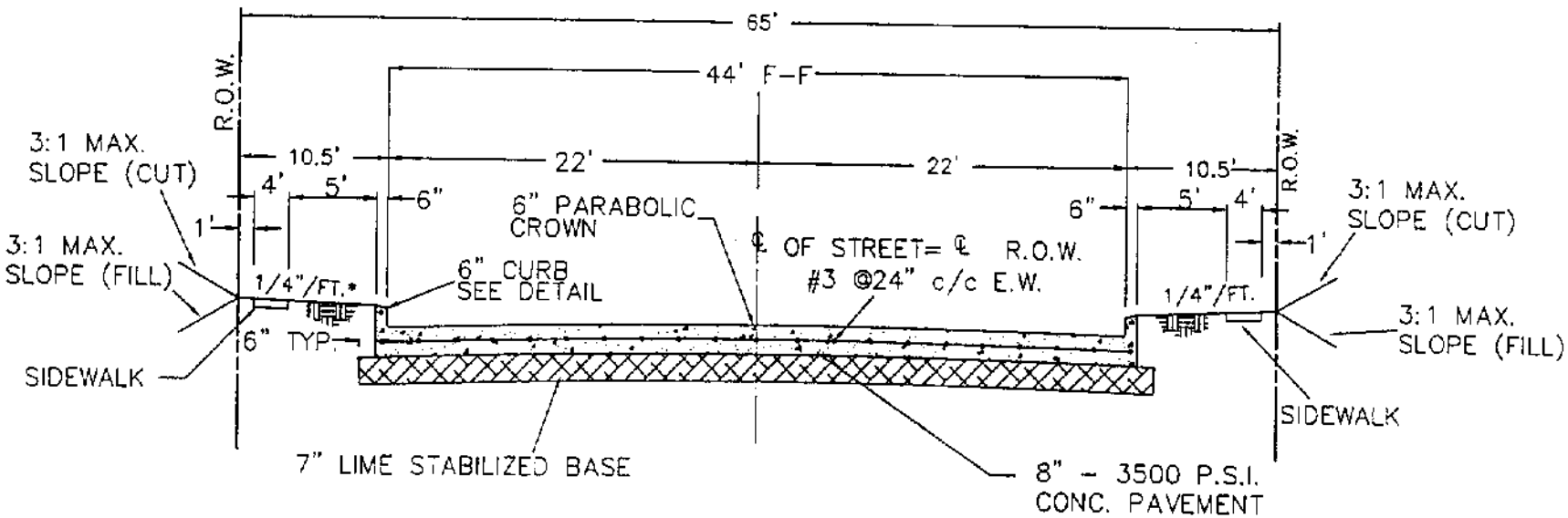

SECONDARY THOROUGHFARE
TYPE E

NTS

*1/4"/FT. MIN. SLOPE &
3/4"/FT. MAX. SLOPE

SECONDARY THOROUGHFARE
TYPE E

STANDARD CONSTRUCTION DETAILS
PAVING

DATE: 1998

REV DATE:

SHEET: SD-P46

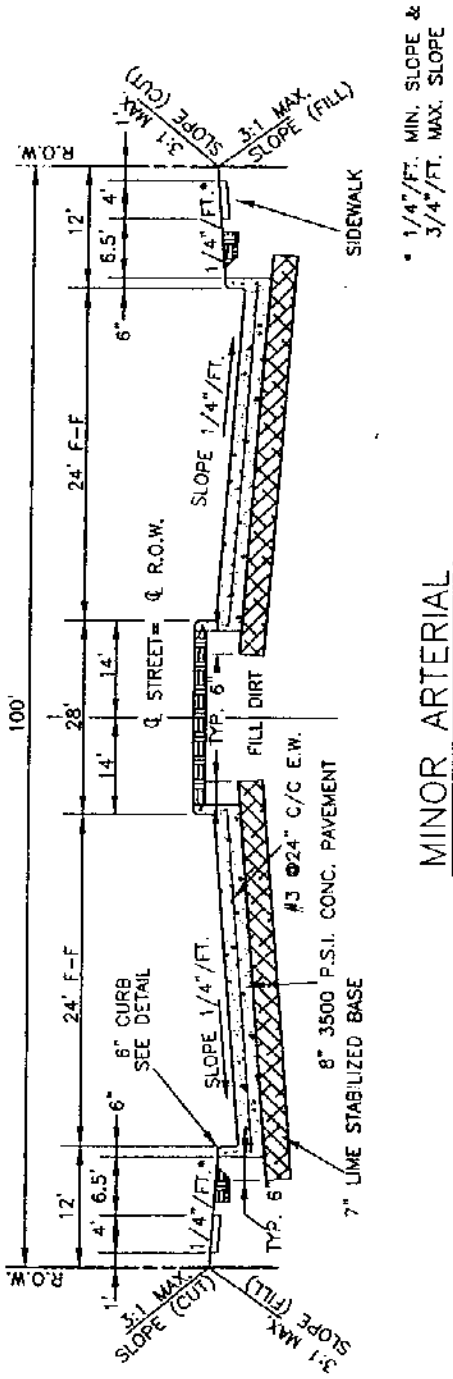

* 1/4"/FT. MIN. SLOPE &
3/4"/FT. MAX. SLOPE

MINOR ARTERIAL

NTS

MINOR ARTERIAL	STANDARD CONSTRUCTION DETAILS PAVING	
	DATE: 1998	REV DATE:	SHEET: SD-P47

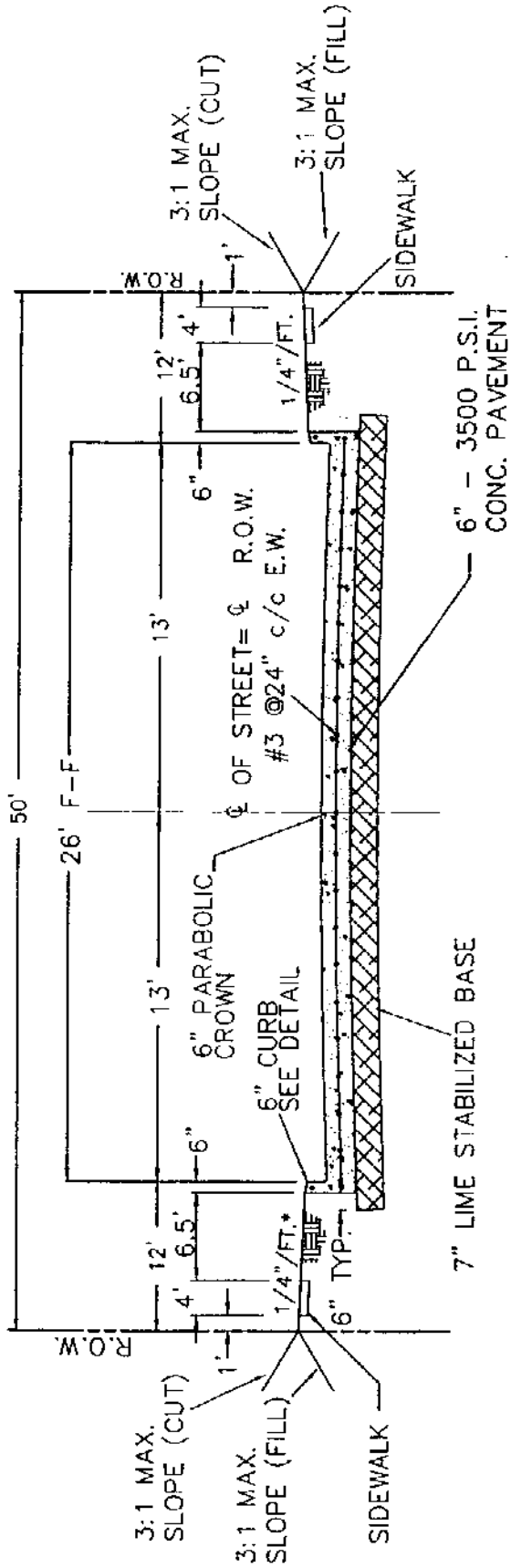

*1/4"/FT. MIN. SLOPE &
3/4"/FT. MAX. SLOPE

RESIDENTIAL

NTS

	RESIDENTIAL PAVEMENT	STANDARD CONSTRUCTION DETAILS PAVING		
		DATE: 1999	REV DATE:	SHEET: SD-P48

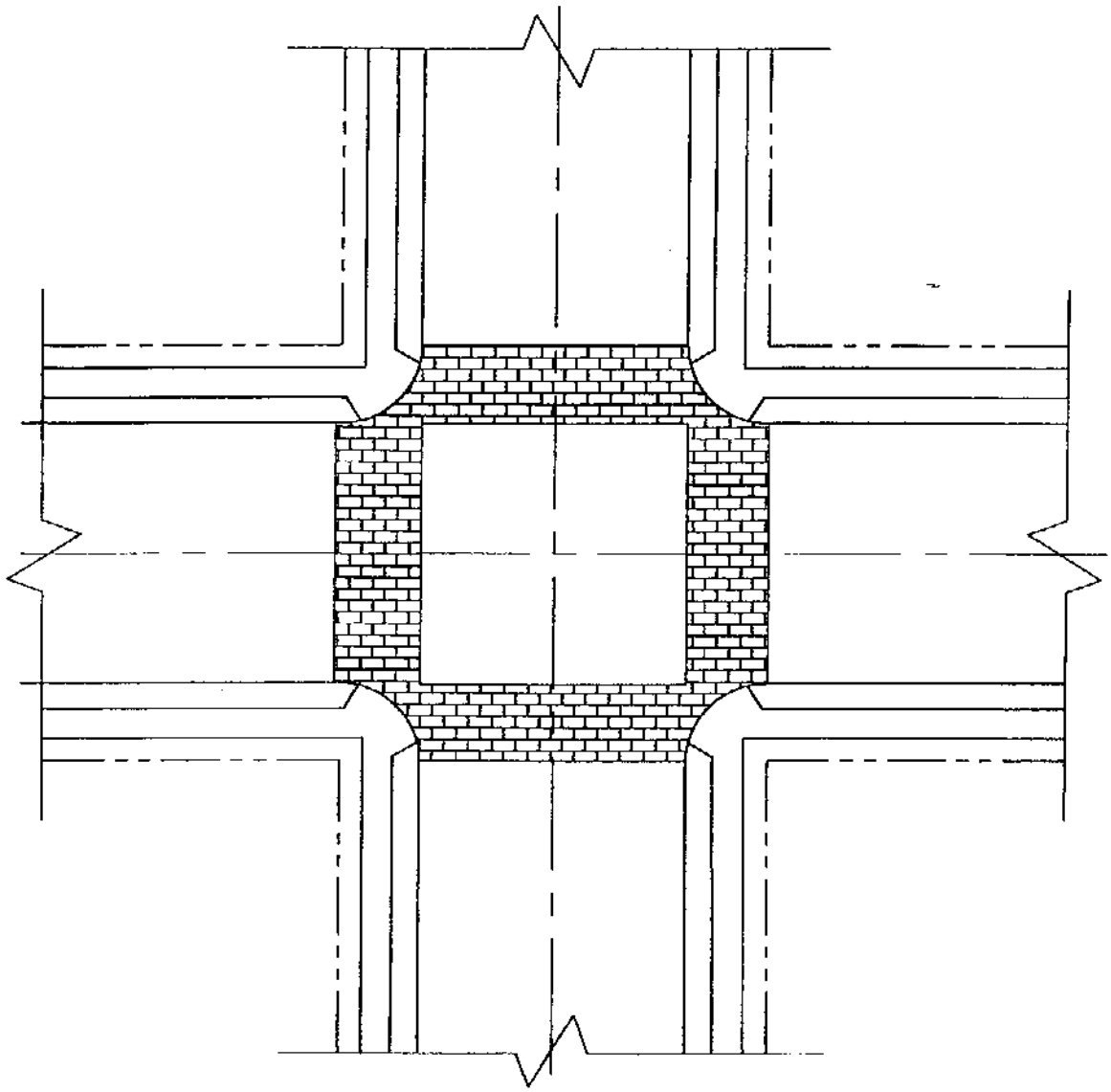

CONCRETE PAVERS AT INTERSECTIONS

NTS

NOTE
1. ALL PAVERS SHALL BE AS MANUFACTURED BY PAVESTONE OR APPROVED EQUAL.
2. COLOR TO BE SELECTED BY CITY.
3. CONCRETE THICKNESS & REINFORCEMENT UNDER PAVERS TO BE THE SAME AS ADJACENT STREET PAVING.
4. PROVIDE 1" SAND BETWEEN PAVERS & CONCRETE.
5. SEE SD-P11 FOR SECTION.

	CONCRETE PAVERS AT INTERSECTIONS	STANDARD CONSTRUCTION DETAILS PAVING	
		DATE: 2000	SHEET: SD-P49